SNS COLLEGE OF TECHNOLOGY

An Autonomous Institution
Coimbatore – 35

Accredited by NBA – AICTE and Accredited by NACC – UGC with 'A+ Grade
Approved by AICTE , New Delhi and Affiliated to Anna University , Chennai.

DEPARTMENT OF AGRICULTURE ENGINEERING

19AG302 – FARM IMPLEMENTS AND MACHINERY

2019-20 BATCH - III YEAR V SEMESTER

UNIT V. SPRAYERS AND DUSTERS
TOPIC – L26- COMPONENTS OF SPRAYERS

BASIC COMPONENTS OF A SPRAYER

Components of a sprayer are as follows

a) Pump

b) Chemical tank

c) agitator

d) Air chamber

e) pressure gauge

f) Pressure regulator

g) valves

h) Strainer

i) suction line

j) delivery line

k) nozzles

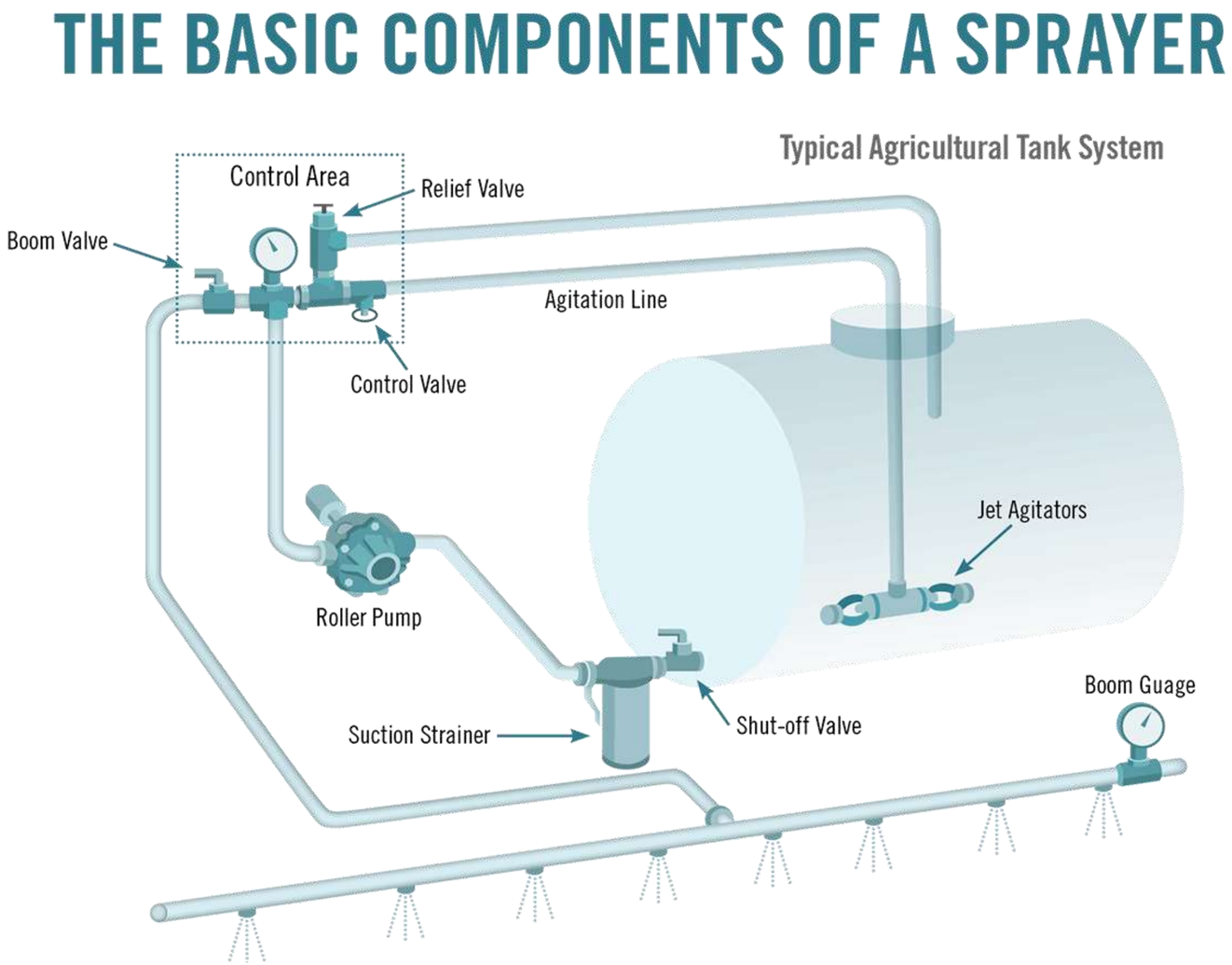

PUMP AND TANK

- **Pump :**

- **A pump is a device used to move fluids, such as liquids or slurries, or gases from one place to another. A pump displaces a volume by physical or mechanical action. Most hydraulic sprayers are equipped with positive displacement pumps capable of developing pressure, required for many spraying jobs. The discharge capacity of these pumps is approximately proportional to the speed. A pressure relief valve or by-pass valve is required to protect these positive acting pumps from damage when the discharge line is closed and for the convenience of the operator.**

- **Tank:**

- **It is the container to hold the chemical solution. It is made up of PVC, Brass, etc. It is usually made of metal sheet or synthetic rubber or plastic having good resistant quality against corrosion, erosion, and similar actions. The size of the tank varies according to the pump capacity and the requirements.**

AGITATOR AND AIR CHAMBER

- **Agitator:**

- **It is the device which stirs the solution and keep the contents in homogenous condition. Positive agitation of spray material in the tank is essential to permit using the full range of spray materials including powdery emulsions, fungicides, cold water paints or other spray material. The propeller or paddle type mechanical agitators or hydraulic agitators are very common.**

- **Air chamber:**

- **In a reciprocating type pump, an air chamber is provided on the discharge line of the pump to level out the pulsations of the pump and thus providing a constant nozzle pressure**

PUMPS FOR THE SPRAYERS

1. features of Piston or plunger pump:

- The displacement pump used on sprayers with piston plunger, rotary and diaphragm.
- Self priming.
- Automatic (spring loaded) by-pass valve to control pressure and protect equipment from mechanical damage if flow is shut off.
- Piston plunger well suited for high-pressure orchard sprayers multi-purpose sprayers.
- Designed for both low and high pressure sprayers.
- More expensive, occupy more space, more heavy, durable and handle abrasive material without excessive wear.
- Volumetric efficiency high (90% or more), discharge rate is function of crank speed and volumetric displacement. Crank speed of small spray pump - 400 to 600 r/min., high – pressure of 125-300 r/min.
- Mechanical efficiency 50 to 90% depends on size and condition of pump.

2.ROTARY PUMP

Features of Rotary pump :

- Used for low pressure sprayers.
- Common types gear pump, roller pump.
- Nylon used for rollers, rubber, steel and carbon also
- Rollers held against with centrifugal force.
- Roller rotary pumps are compact, inexpensive and operated at speed suitable for direct connection of PTD.

ROTARY PUMPS

Features of rotary pumps :

- Pumping action depends on maintaining close clearance between housing and gear or impellers.
- Classed or positive displacement pump.
- Pressure above 100 psi is recommended.
- Gear pumps cannot be used for wettable powder and abrasive material as rapid wear and short life.
- Roller pumps are better than gear as roller can be replaced.

CENTRIFUGAL PUMP

Features of Centrifugal pump :

- depends on centrifugal force.
- High speed, high volume devices and do not have positive displacement pump.
- Pressure developed is function of discharge rate.
- Discharge rate varies directly with speed.
- Head varies with square of speed.
- Power varies with cube of speed.
- Multistage increases pressure without increase pressure.
- Simple and handles abrasive material easily.
- Well suited to air blast sprayers, air craft sprayers in high flow rate, low pressure needed.
- Speed ranges 1000 to 4000 r/min. depending on pressure required and diameter of 1 impeller.
- They are not displaced, not self brimming and do not require pressure relief valve.

MISCELLANEOUS PUMPS

- Features of Diaphragm pumps
- Diaphragm pumps used for flow rates 19 to 23 L/min.
- Valves and diaphragm are only moving parts.
- Handle abrasive material.

MANUALLY OPERATED SPRAYERS

ROCKER SPRAYER

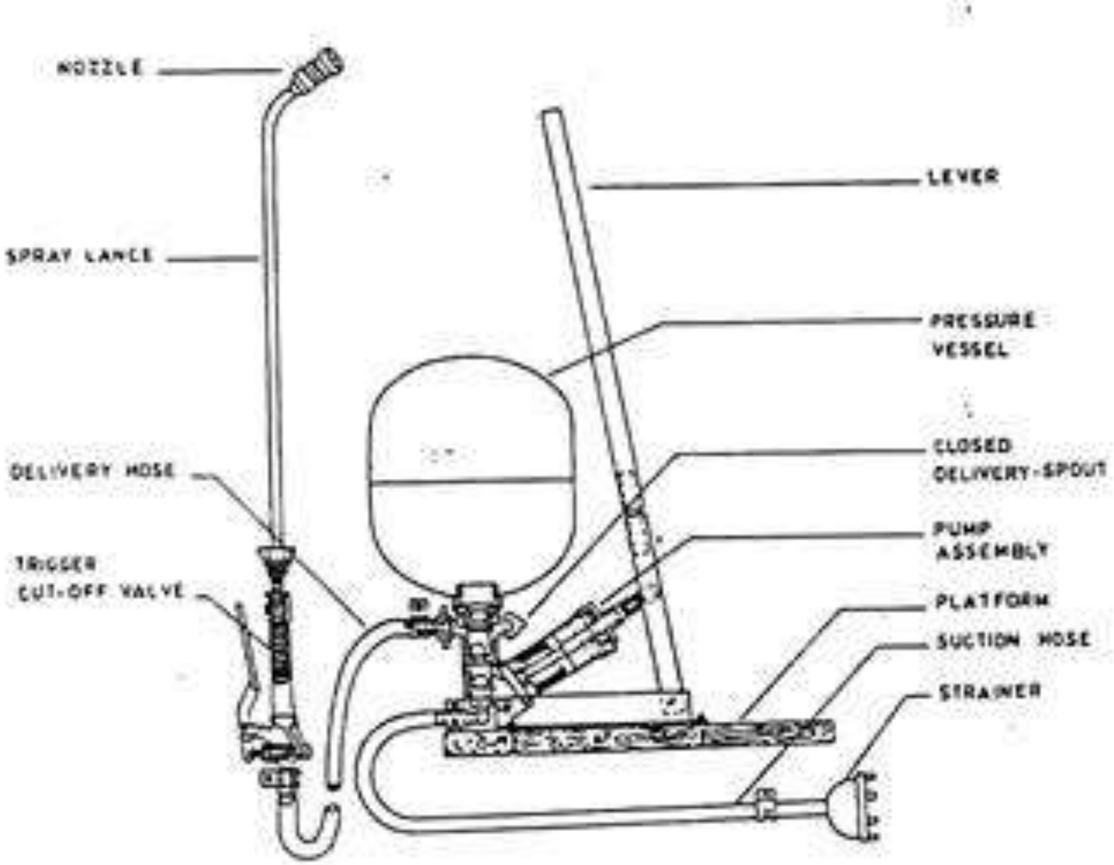

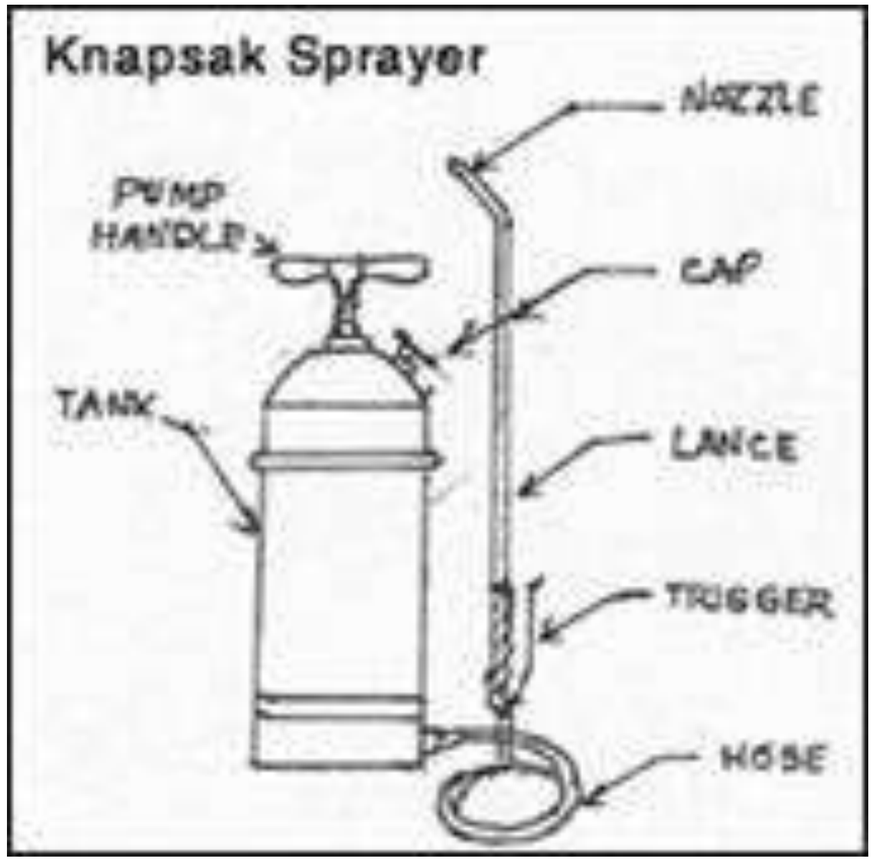

KNAPSACK SPRAYERS

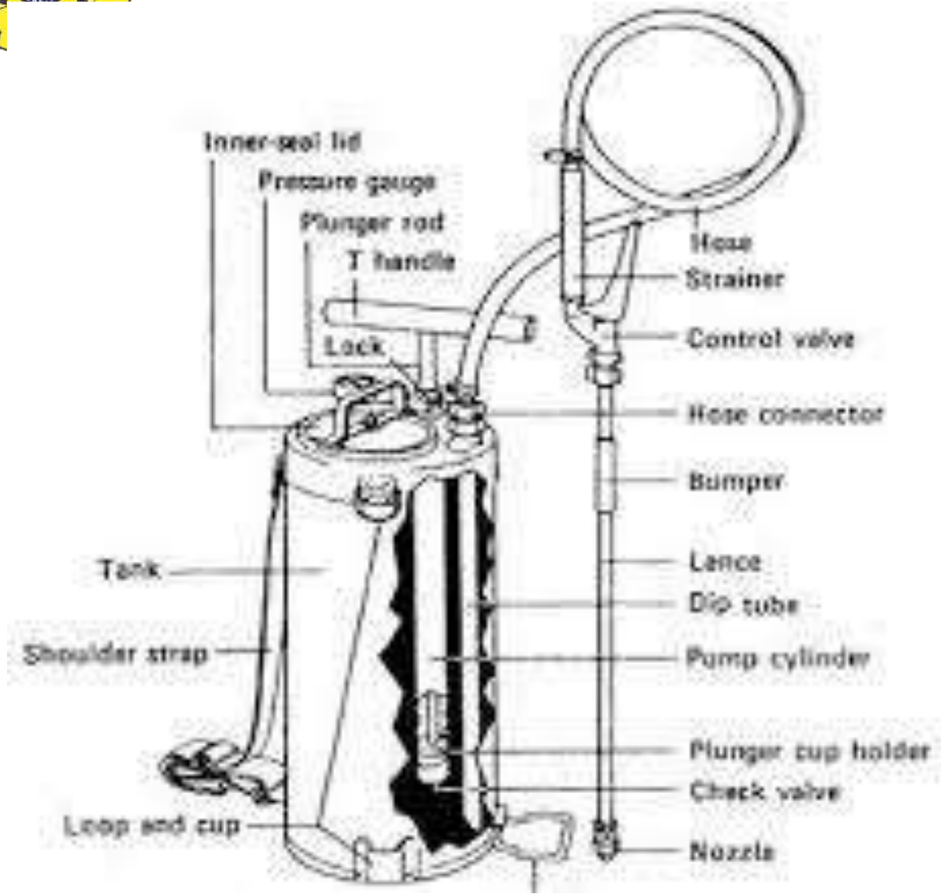

HAND OPERATED KNAPSACK SPRAYER

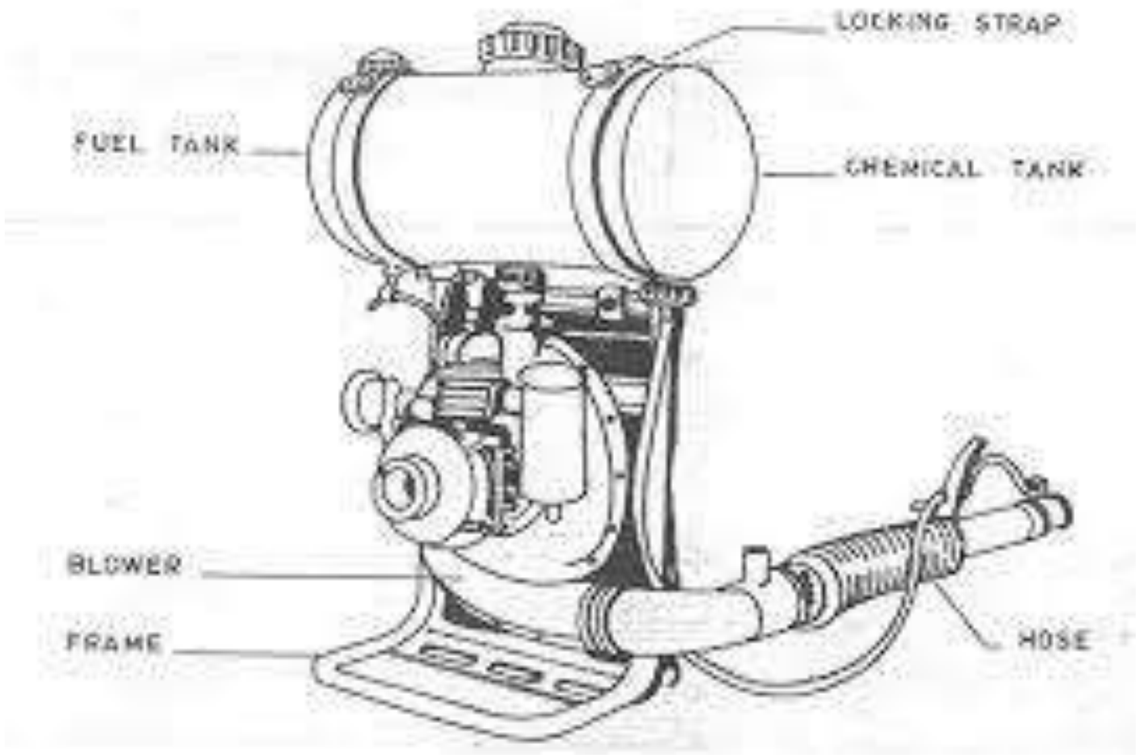

POWER OPERATED KNAPSACK SPRAYER

COMPONENTS OF FOOT SPRAYER

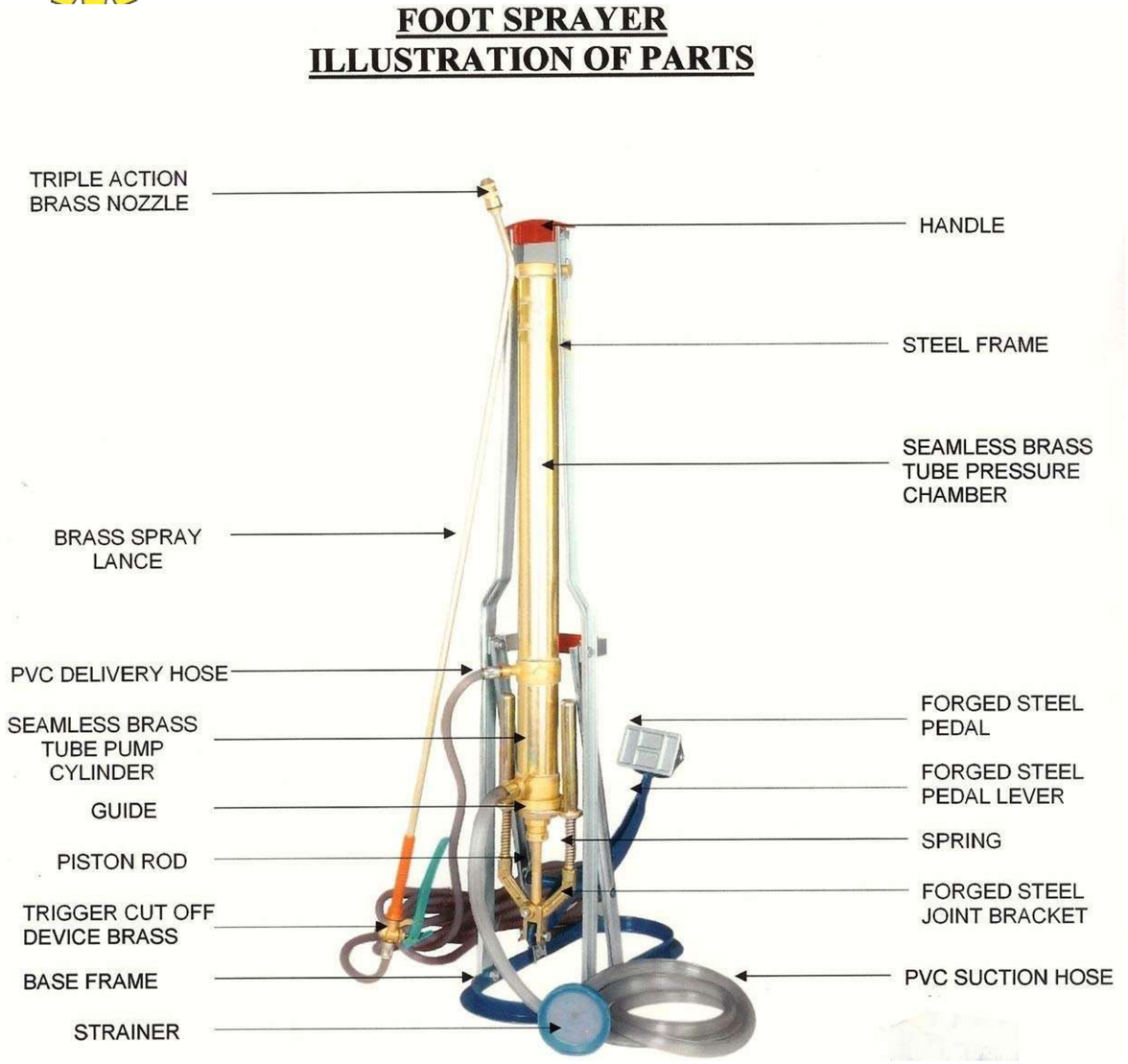

GARDEN SPRAYER

DRONE SPRAYER

- Sprayer and plant-protection drones are new tools available to farmers and can be used to apply pesticides to small land areas and acreages. This type of sprayer can access land that is either too wet or otherwise inaccessible by humans and can provide greater spray infiltration into the plant canopy. Also, people are removed from spraying operations, which can greatly help reduce chemical contamination to humans. The disadvantages are that most sprayer drones can only carry 1 to 2 gallons of liquid and only fly for 10 to 20 minutes. For commercial use they may require fairly rigorous certifications, including Federal Aviation Administration Regulations Part 137 and Part 107 and other state and local certifications.

ASPEE-HTP TRIPLEX PISTON TYPE TRATOR MOUNTED SPRAYER WITH PULLEY, PRESSURE VESSEL, PRESSURE GAUGEAND PRESSURE REGULATORE

TRACTOR MOUNTED BOOM SPRAYERS

SPRAYER FOR MANGO TREE

ORCHARD SPRAYER

Fig: 8.Air blast sprayer(Courtesy: ASPEE Sprayer)

PRESSURE GAUGE AND PRESSURE REGULATOR

- **Pressure gauge :**

- **A pressure gauge properly calibrated, within the pressure range of the pump is provided on the discharge line to guide the operator for making proper adjustment of the pressure at site.**

- **Pressure regulator:**

- **The pressure regulator serves several important functions. It is the means of adjusting the pressure as required for any spray job with in the pressure range of the pump. With the positive displacement type of pump, it also serves as a safety device in automatically unloading the excess pressure by directing the unused discharge flow from pump back to the tank.**

VALVES AND STRAINER

- **Valves:**
- **A valve is a device that regulates the flow of a fluid (gases, liquids, fluidized solids, or slurries) by opening, closing, or partially obstructing various passageways. Cut-off valve is provided in the delivery line to control the flow from the pump, By-pass valve is provided in the delivery line to by-pass the flow from pump to tank when flow in delivery line is reduced than the pump capacity**
- **Relief valve - It is an automatic device to control the pressure of fluid or gas within a range a predetermined pressure.**
- **Strainer : It is a small circular plastic ring with nylon wire mesh to filter any dust particle coming with the chemical solution It is included in the suction line between the chemical tank and the check valves. In some sprayers strainers are provided at the mouth of the chemical tank. Eg. Knapsack sprayers**

NOZZLES AND SPRAY GUN

- **Nozzles :**
- **It is the component which breaks the fluid in to fine droplet . Automation of spray fluid is usually achieved by discharging the liquid through an orifice called nozzle under pressure. Atomization is also achieved by breaking up the jet of liquid with a blast of air.**
- **Spray gun -**
- **It is a hand held metallic of PVC pipe to one end of which the nozzle is fitted and a flow cut off valve and a handle are fitted at the other end. The delivery hose is connected to the spray gun. It conducts the fluid from the delivery hose to the nozzle. The operator holds the gun and does the spraying job. Area of coverage by a spray gun is less compared to the coverage of a spray boom. Spray guns are used with low power sprayers E.g. Knapsack sprayers, rocker sprayer**

SPRAY BOOM AND OVERFLOW PIPE

- **Spray boom –**
- **It is a long metallic or PVC pipe to which several nozzles are fitted with. The delivery hose is connected to the spray gun. High power and high capacity sprayers use spray booms. The coverage is larger compared to spray guns. Booms are usually mounted on suitable structures and used. E.g. Tractor operated sprayers, power tiller operated sprayers**

- **Over-flow pipe –**
- **It is a conduit pipe through which excess fluid from a pump is bypassed in to chemical tank by the action of a relief valve or pressure regulator.**

COMPONENTS OF SPRAYER

- **Spray Gun:** It is a lance from which the spray is readily adjustable during the operation.
- **Spray Boom:** It is spray lance with spray nozzles fitted to a head mounted at right angle to the lance.
- **Over-flow Pipe:** It is a conduit through which excess fluid from a pump is by-passed by the action of relief value or pressure regulator.
- **Relief-value:** It is an automatic device which opens when the pressure of fluid or gas reaches a pre-determined value.
- **Pressure regulator:** It is an automatic device to control the pressure of fluid or gas within a range of settings.
- **Cut-off value:** It is mechanism between pump and nozzle to control the flow of liquid from sprayer. It is operated by hand.

STRAINER AND SPACER

- **Strainer-**
- **It is a small circular plastic ring with nylon wire mesh to filter any dust particle coming with the chemical solution**

- **Spacer:**
- **There are two number of runner/ plastic rings placed in between nozzle plate and swirl plate and between swirl plate and strainer for effective travel of the solution**

COMPONENTS A OF NOZZLE

- **Nozzle body –**

It is the main component which encloses all other components of a nozzle

Swirl plate - It is metal disc with two tangential holes which imparts a swirl or rotation to the liquid passing through it

Nozzle disc -

It is the component which breaks the fluid in to fine droplet. It is a flat disc with an orifice at the centre. When the spray solution reaches the disc from the swirl plate the disc builds up further pressure on the fluid and when the fluid passes out of the orifice, it breaks in to fine droplets . The disc has a specific design to impart a hollow cone or solid cone or a flat fan type of discharge to the outgoing fluid. The popular nozzles are a) hollow cone b) solid cone c) fan or flat type

COMPONENTS A OF NOZZLE

- **Nozzle Cap:** Component which retains the assembled parts in or on a nozzle body. The nozzle disc or tip may be integral with the cap.
- **Filter:** Component to remove suspended matter larger than a pre-determined size from fluid.
- **Nozzle boss:** It is a lug on spray boom or spray lance to which a nozzle body or cap is screwed.
- **Nozzle tip:** It is the component containing final orifice of nozzle usually a fan nozzle.

TYPES OF SPRAY

- Sprays can be classified in the following :
- 1) High volume spray: (More than 400 L spray/ha)
- The dilute liquids are applied by hydraulic machines. It consumes more time and labour. Hand operated - pressure developed 1-7 Kg/cm, mechanically operated or power sprayer - pressure 3-8 kg_f / cm^2
- 2) Low Volume Spray: (5 to 400 L/ha)
- It uses air stream from fan as pesticide carried with small quantities of liquid. There is a saving of material and labour.
- 3) Ultra-low volume (ULV): (Less than 5 L spray/ha)
- ULV spraying can be defined as plant protection operation in which total volume of liquid applied amounts to a few ml per acre. It is mainly used in air craft spraying. Undiluted, technical-grade liquid pesticides (i.e. no water added). Grasshopper and co-deal leaf petal. Selection of technique depends on type of vegetation, kind of pests and approach to field.

TYPES OF SPRAY

- **Foam Spraying:** In this system a foaming agent (chemical additive) is added to spraying solution. The spray is passed through a special nozzle. This system is economical.
- **Ultra-low volume sprayer:**
- The sprayer has a motor powered by 6 to 12 volt battery. Spinning disc is attached to a motor, having grooves or teeth and rotates at a very high revolution per min. (4000-9000). The spinning disc receives the concentrated chemical from a plastic container having a capacity of 1 li. (approx). Average droplet size varies between 35-100 micron. It is used for application of weedicides and for spraying small trees and crops.

TYPES OF HYDRAULIC NOZZLES

Tyoes of Hydraulic nozzle are:

a) Side-entry hollow cone

b) Disk-type solid cone

c) Core-insert hollow cone

d) Fan spray

e) Flooding

f) Disk-type hollow cone

g) Jet or solid stream nozzle

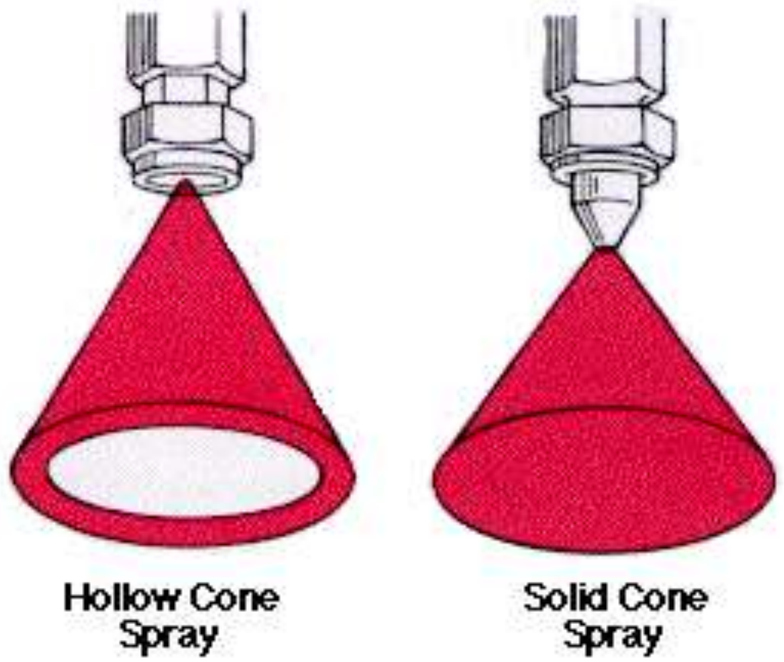

- **Hollow-cone nozzle:** liquid is fed into whirl chamber through a tangential side entry passage or through spiral passages in whirl plate or core insert to give it a rotary velocity component. Orifice is located on axis of whirl chamber, liquid emerges in form of hollow conical sheet and then breaks up into droplets.

TYPES OF HYDRAULIC NOZZLES

- **Core-insert** is mainly in small size nozzles and used limited in agricultural spraying.
- **Solid-cone nozzle:** there is addition of internal axial orifice which strikes the rotating liquid within the orifice of discharge. The breaking of droplet is due to impact.
- **Fan-spray nozzle** forms narrow elliptical spray pattern. The liquid is forced to come out as a flat fan shaped sheet which is then broken into droplets. It is mostly used for low-pressure spraying.
- **Flooding nozzle** liquid emerging through a circular orifice impinges upon a curved deflector which produces fan-shaped sheet having relatively wide spray angle.

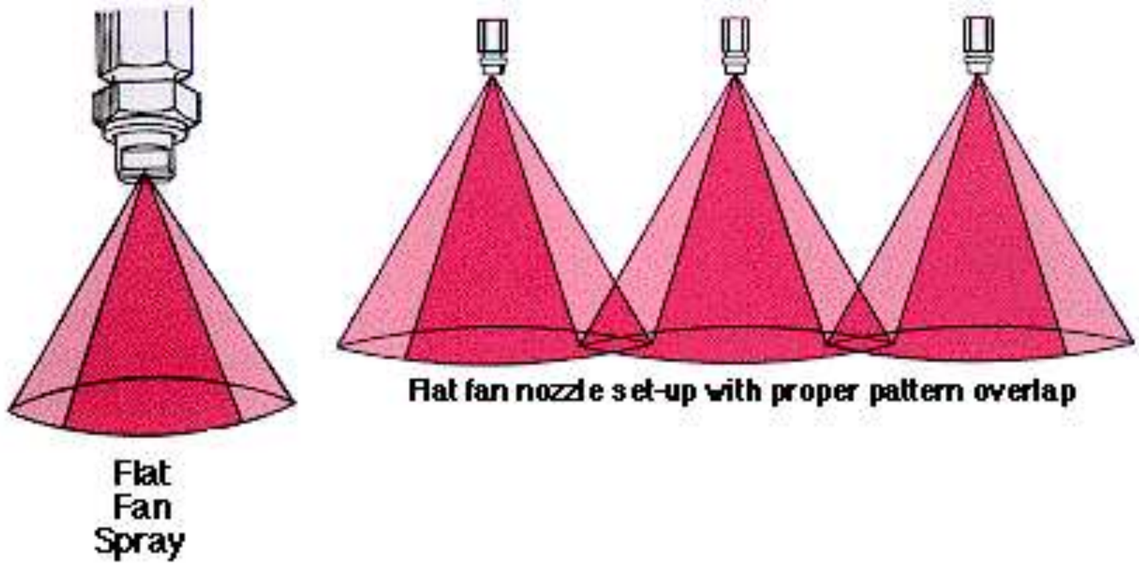

CHARACTERISTICS OF NOZZLES

- Flow rate of a particular nozzle is proportional to square root of pressure.
- Discharge rate is proportional to orifice area.
- Nozzles on field sprayers have spray angle 60^0 to 90^0 (Fan, Hollow cone).
- Flooding nozzles have spray angle 100^0 to 150^0 and operating pressure below 1.5 Kg/cm^2 is undesirable as nozzle does not work satisfactorily.
- Low-velocity jet break-up are used to obtain uniform, predictable droplet sizes and reducing drift. Pressure is low that produce non-turbulent flow because of liquid to emerge from a circular orifice or capillary tube as a cylindrical column or filament.

SPRAY PATTERN OF DIFFERENT TYPES OF NOZZLES

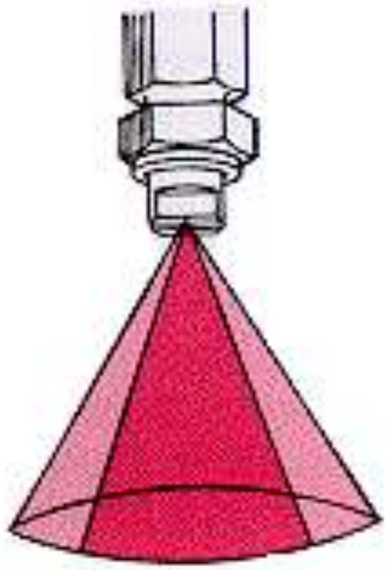

Flat
Fan
Spray

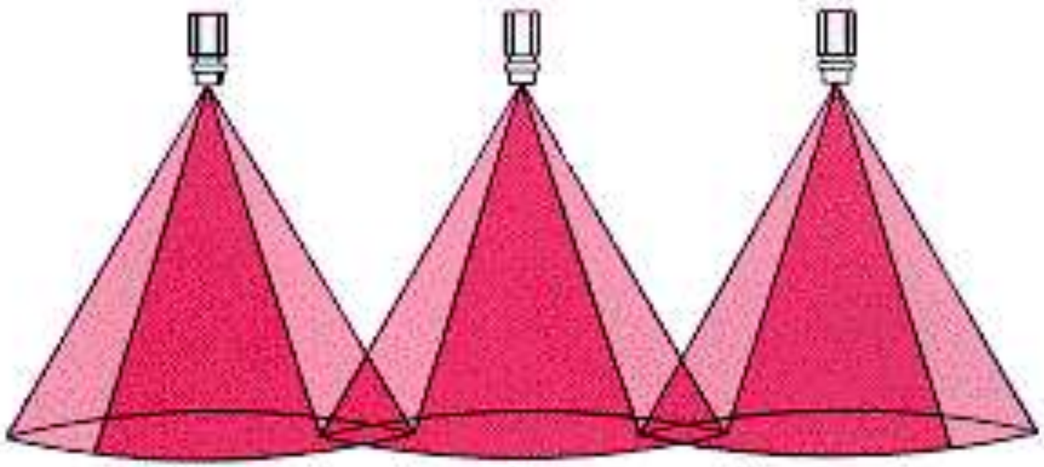

Flat fan nozzle set-up with proper pattern overlap

SPRAY PATTERN OF DIFFERENT TYPES OF ATOMIZING NOZZLES

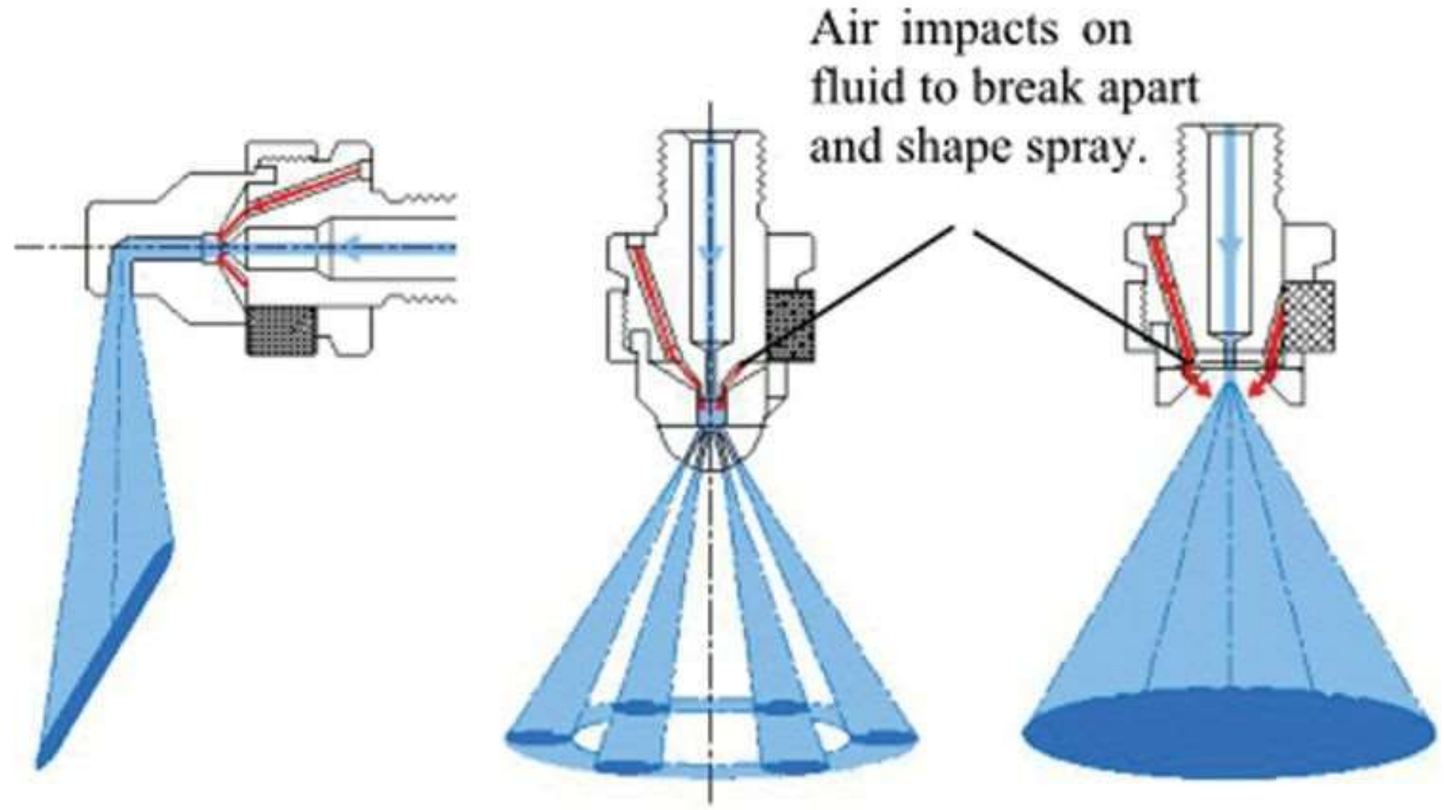

Flat fan air atomising nozzle

Hollow cone air atomising nozzle

Full cone air atomising nozzle

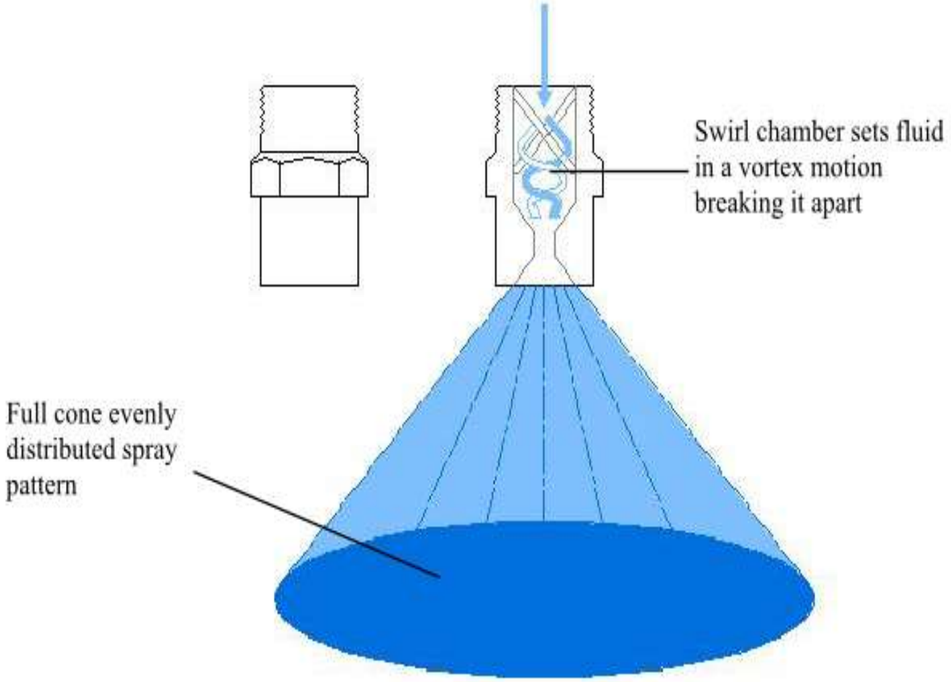

- **FLAT FAN SPRAY NOZZLE**

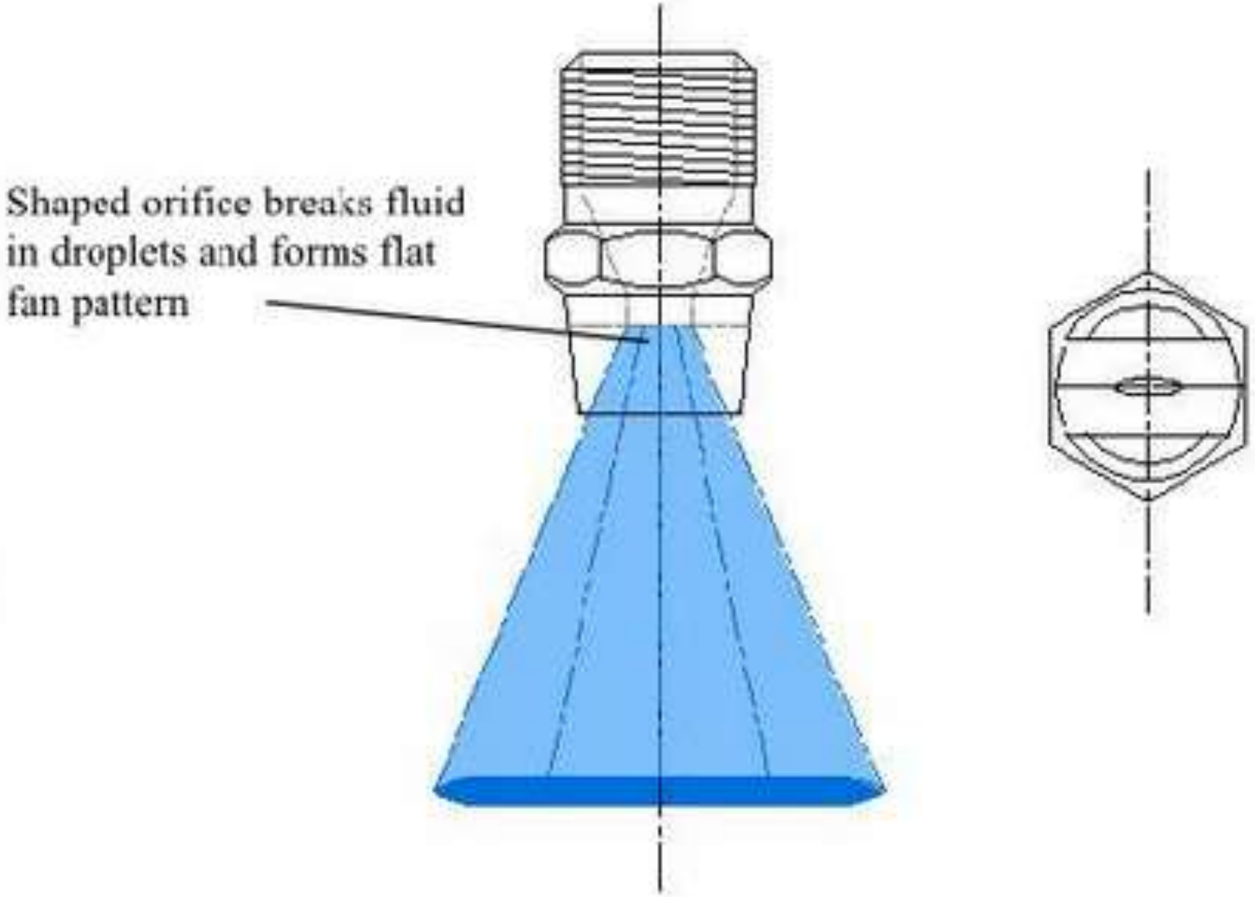

FULLCONE SPRAY PATTERN

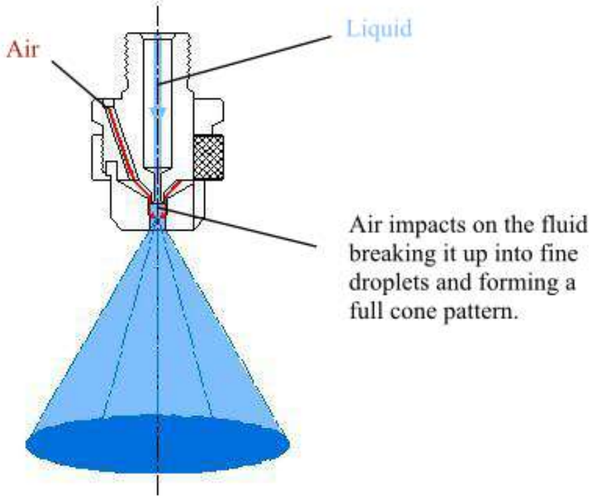

Representation of a hydraulic full cone nozzle where for a given flow rate there is a pressure drop caused by the fluidic resistance, which is related to the internal mechanical characteristics of this nozzle.

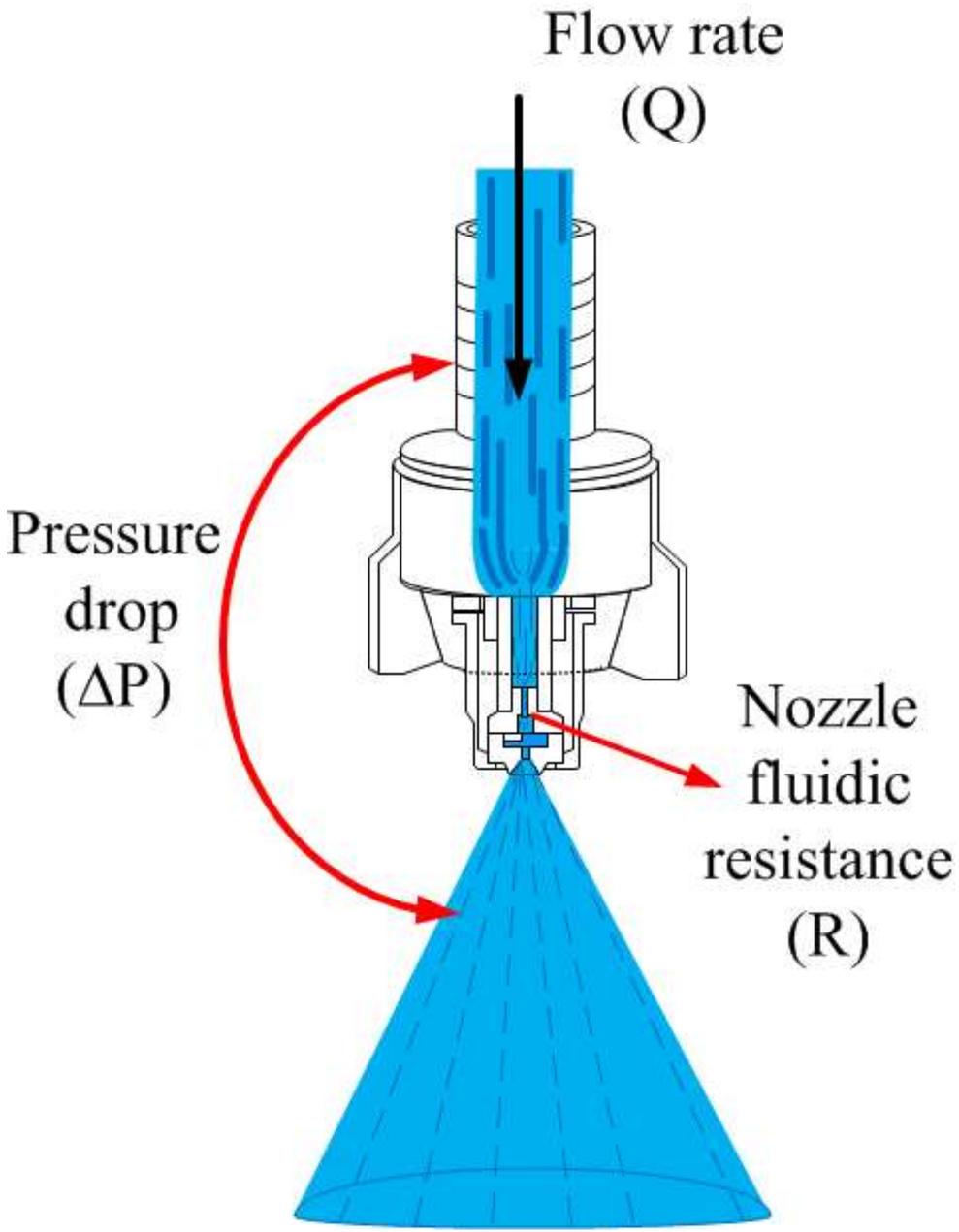

SCHEMATIC DIAGRAM OF PRESSURE-SWIRL NOZZLE

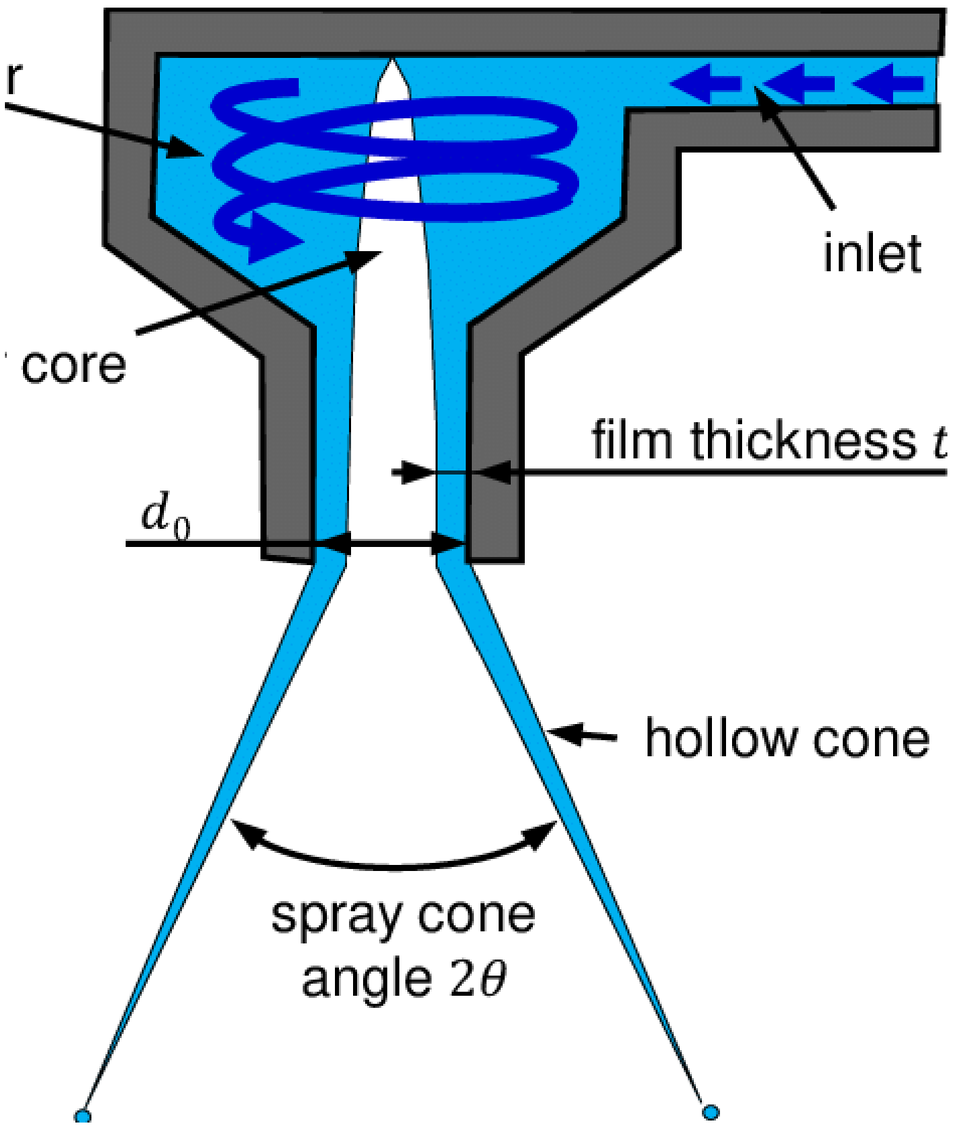

TRACTOR FRONT MOUNTED FIELD SPRAYER

TRACTOR MOUNTED FIELD SPRAYER

SOLAR PV OPERATED MULTI NOZZLE PESTICIDE SPRAYER

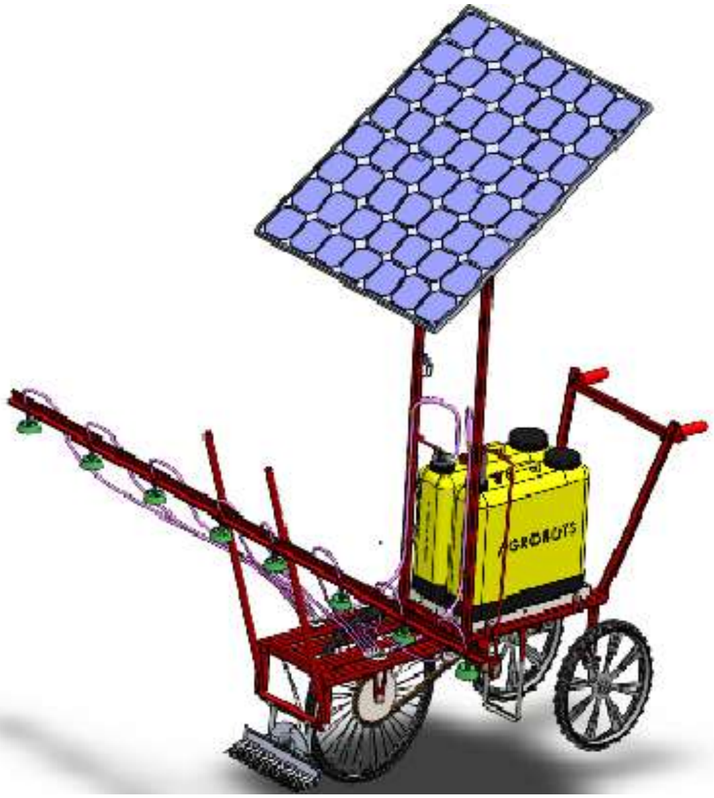

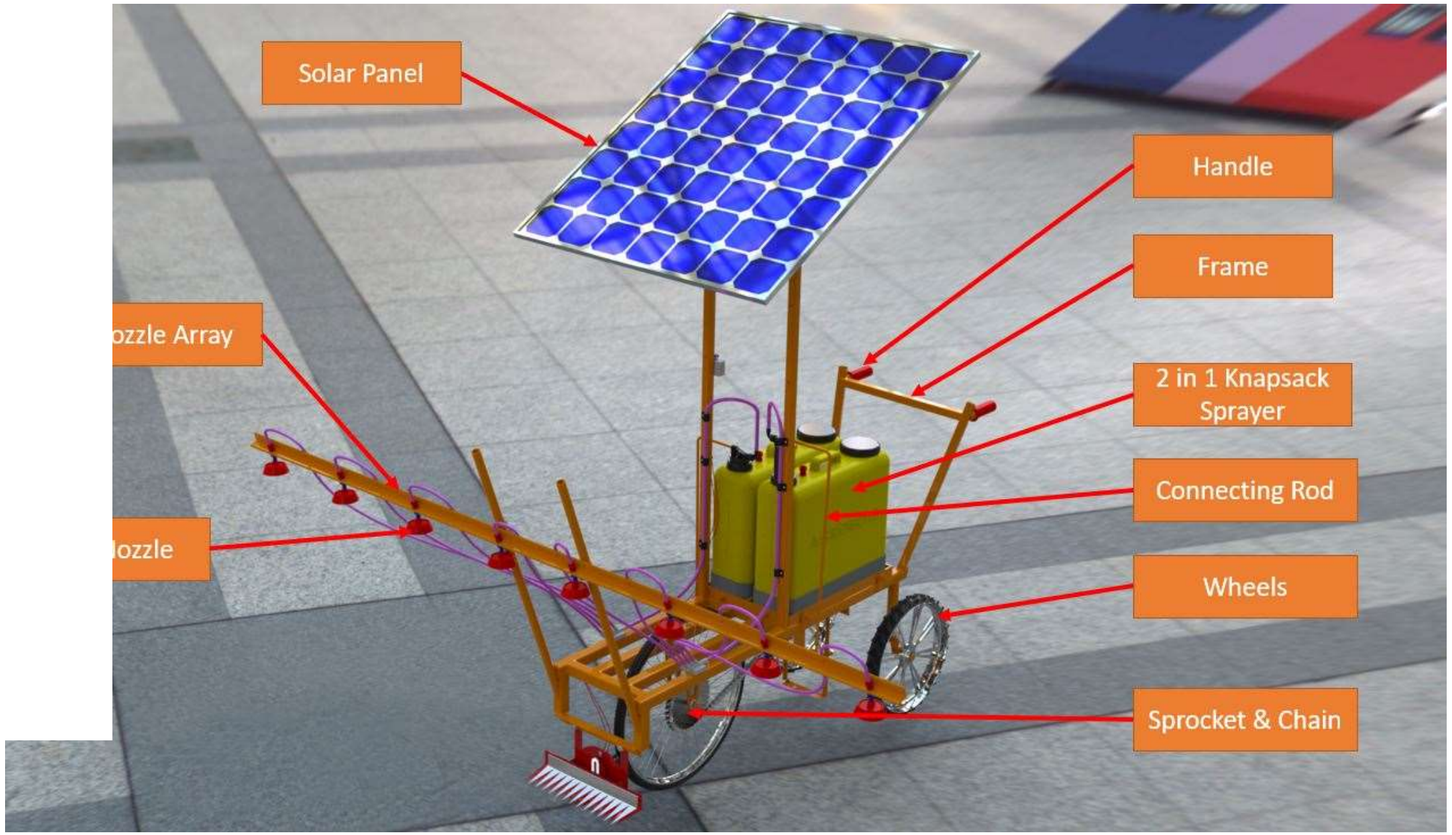

SPRAYING WITH DRONE

SPECIFICATIONS OF BATTERY OPERATED BACKPACK SPRAYER

Details	Description
Type Of Equipment	Battery operated Backpack Sprayer
Make Model	Blue Star BS-16
Weight of Pump	6 kg
Source of Power	12 Volts,8 Ah, SealedLEAD Acid Battery
Tank Capacity, Liter	16
Over all Dimensions, CM	Length : 37 Width : 24 Height : 54.5
No. of . Nozzles	2 No's
Type of Nozzle as standard accessory	Straight nozzle (Single) & Double hole spray nozzle (fan spray nozzle and F Style)
Length of the Lance, cm	57 + 57
Length of hose , m	1.35
Material of Construction of various components	Tank : HDPE Pump : Poly Propylene Nozzle : Plastic
Discharge, Lit/ min	0.48-0.72
Pressure, Kg/ CM^2	5.6
Accessories	Battery Charger