1.Describe in detail about the mass and energy balances with diagram.

Material quantities, as they pass through food processing operations, can be described by material balances. Such balances are statements on the conservation of mass. Similarly, energy quantities can be described by energy balances, which are statements on the conservation of energy. If there is no accumulation, what goes into a process must come out. This is true for batch operation. It is equally true for continuous operation over any chosen time interval.

Material and energy balances are very important in the food industry. Material balances are fundamental to the control of processing, particularly in the control of yields of the products. The first material balances are determined in the exploratory stages of a new process, improved during pilot plant experiments when the process is being planned and tested, checked out when the plant is commissioned and then refined and maintained as a control instrument as production continues. When any changes occur in the process, the material balances need to be determined again.

The increasing cost of energy has caused the food industry to examine means of reducing energy consumption in processing. Energy balances are used in the examination of the various stages of a process, over the whole process and even extending over the total food production system from the farm to the consumer's plate.

BASIC PRINCIPLES

If the unit operation, whatever its nature is seen as a whole it may be represented diagrammatically as a box, as shown in **Figure.** The mass and energy going into the box must balance with the mass and energy coming out.

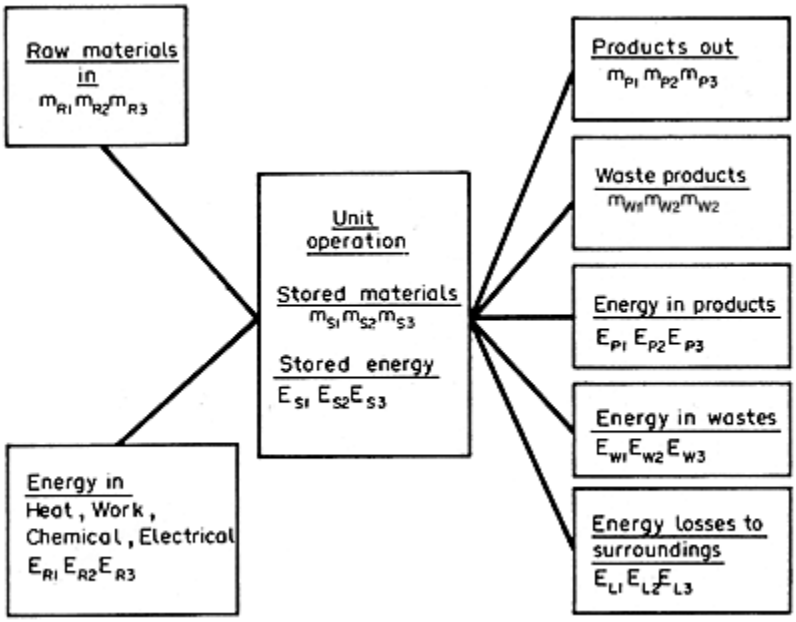

Figure- Mass and energy balance

The law of conservation of mass leads to what is called a mass or a material balance.

Mass In = Mass Out + Mass Stored

Raw Materials = Products + Wastes + Stored Materials.

$\square m_R = \square m_P + \square m_W + \square m_S$

(where □ (sigma) denotes the sum of all terms).

$\square m_R = m_{R1} + m_{R2} + m_{R3} + ...$ = Total Raw Materials.

$\square m_P = m_{P1} + m_{P2} + m_{P3} + ...$ = Total Products.

$\square m_W = m_{W1} + rn_{W2} + m_{W3} + ...$= Total Waste Products.

$\square m_S = m_{S1} + m_{S2} + m_{S3} + ...$ = Total Stored Materials. $\Sigma m_R = \Sigma m_P + \Sigma m_W + \Sigma m_S$
(where Σ (sigma) denotes the sum of all terms).

$\Sigma m_R = m_{R1} + m_{R2} + m_{R3} + ...$ = Total Raw Materials.

$\Sigma m_P = m_{P1} + m_{P2} + m_{P3} + ...$ = Total Products.

$\Sigma m_W = m_{W1} + rn_{W2} + m_{W3} + ...$= Total Waste Products.

$\Sigma m_S = m_{S1} + m_{S2} + m_{S3} + ...$ = Total Stored Materials.

If there are no chemical changes occurring in the plant, the law of conservation of mass will apply also to each component, so that for component A:

m_A in entering materials = m_A in the exit materials + m_A stored in plant.

For example, in a plant that is producing sugar, if the total quantity of sugar going into the plant in sugar cane or sugar beet is not equalled by the total of the purified sugar and the sugar in the waste liquors, then there is something wrong. Sugar is either being burned (chemically changed) or accumulating in the plant or else it is going unnoticed down the drain somewhere. In this case:

$(m_A) = (m_{AP} + m_{AW} + M_{AS} + m_{AU})$

wherem_{AU} is the unknown loss and needs to be identified. So the material balance is now:

Raw Materials = Products + Waste Products + Stored Products + Losses

where Losses are the unidentified materials.

Just as mass is conserved, so is energy conserved in food processing operations. The energy coming into a unit operation can be balanced with the energy coming out and the energy stored.

Energy In = Energy Out + Energy Stored

$$\Sigma E_R = \Sigma E_P + \Sigma E_W + \Sigma E_L + \Sigma E_S$$

where:

$\Sigma E_R = E_{R1} + E_{R2} + E_{R3} + \ldots\ldots$ = Total Energy Entering
$\Sigma E_P = E_{P1} + E_{P2} + E_{P3} + \ldots\ldots$ = Total Energy Leaving with Products
$\Sigma E_W = E_{W1} + E_{W2} + E_{W3} + \ldots\ldots$= Total Energy Leaving with Waste Materials
$\Sigma E_L = E_{L1} + E_{L2} + E_{L3} + \ldots\ldots$ = Total Energy Lost to Surroundings
$\Sigma E_S = E_{S1} + E_{S2} + E_{S3} + \ldots\ldots$ = Total Energy Stored

Energy balances are often complicated because forms of energy can be interconverted, for example mechanical energy to heat energy, but overall the quantities must balance.

2. Discuss with a neat sketch about the material and enthalpy balances in single effect evaporator.

The typical evaporator is made up of three functional sections: the heat exchanger, the evaporating section, where the liquid boils and evaporates, and the separator in which the vapour leaves the liquid and passes off to the condenser or to other equipment. In many evaporators, all three sections are contained in a single

vertical cylinder. In the centre of the cylinder there is a steam heating section, with pipes passing through it in which the evaporating liquors rise. At the top of the cylinder, there are baffles, which allow the vapours to escape but check liquid droplets that may accompany the vapours from the liquid surface. A diagram of this type of evaporator, which may be called the conventional evaporator, is given in **Fig. 8.1**.

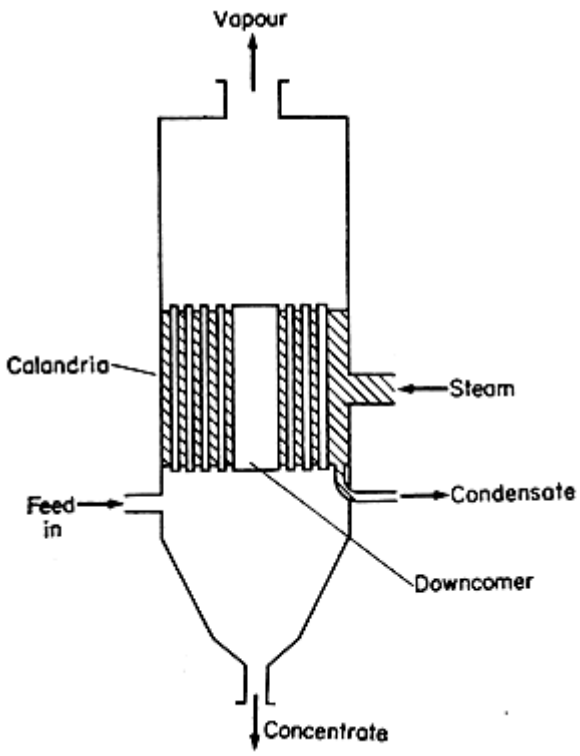

Figure 8.1 Evaporator

In the heat exchanger section, called a calandria in this type of evaporator, steam condenses in the outer jacket and the liquid being evaporated boils on the inside of the tubes and in the space above the upper tube plate. The resistance to heat flow is imposed by the steam and liquid film coefficients and by the material of the tube walls. The circulation of the liquid greatly affects evaporation rates, but circulation rates and patterns are very difficult to predict in any detail. Values of overall heat transfer coefficients that have been reported for evaporators are of the order of 1800-5000 J m^{-2} s^{-1} °C^{-1} for the evaporation of distilled water in a vertical-tube evaporator with heat supplied by condensing steam. However, with dissolved solids in increasing quantities as evaporation proceeds leading to increased viscosity and poorer circulation, heat transfer coefficients in practice may be much lower than this.

As evaporation proceeds, the remaining liquors become more concentrated and because of this the boiling temperatures rise. The rise in the temperature of boiling reduces the available temperature drop, assuming no change in the heat source. And so the total rate of heat transfer will drop accordingly. Also, with increasing solute concentration, the viscosity of the liquid will increase, often quite substantially, and this affects circulation and the heat transfer coefficients leading again to lower rates of boiling. Yet another complication is that measured, overall, heat transfer coefficients have been found to vary with the actual temperature drop, so that the design of an evaporator on theoretical grounds is inevitably subject to wide margins of uncertainty.

Perhaps because of this uncertainty, many evaporator designs have tended to follow traditional patterns of which the calandria type of Fig. 8.1 is a typical example.

3.Explain the construction and operation of triple effect evaporatorwith neat sketch and discuss the capacity and economy of multiple effect evaporator.

An evaporator is essentially a heat exchanger in which a liquid is boiled to give a vapour, so that it is also, simultaneously, a low pressure steam generator. It may be possible to make use of this, to treat an evaporator as a low pressure boiler, and to make use of the steam thus produced for further heating in another following evaporator called another effect.

Consider two evaporators connected so that the vapour line from one is connected to the steam chest of the other as shown in **Fig. 8.2**, making up a two effect evaporator.

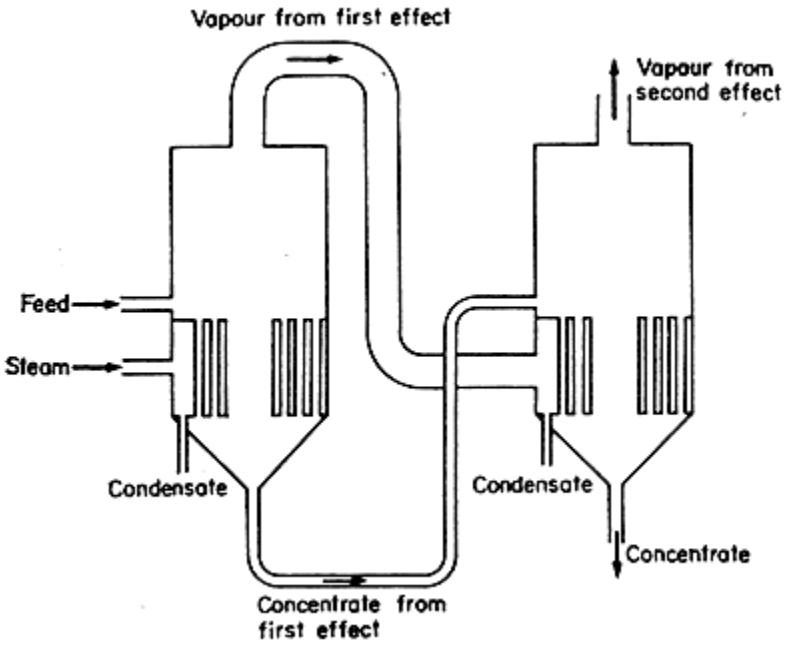

Figure 8.2 Double effect evaporator – forward feed

If liquid is to be evaporated in each effect, and if the boiling point of this liquid is unaffected by the solute concentration, then writing a heat balance for the first evaporator:

$$q_1 = U_1A_1(T_s - T_1) = U_1A_1\Delta T_1 \qquad (8.1)$$

where q_1 is the rate of heat transfer, U_1 is the overall heat transfer coefficient in evaporator 1, A_1 is the heat-transfer area in evaporator 1, T_s is the temperature of condensing steam from the boiler, T_1 is the boiling temperature of the liquid in evaporator 1 and ΔT_1 is the temperature difference in evaporator 1, = (T_s - T_1).

Similarly, in the second evaporator, remembering that the "steam" in the second is the vapour from the first evaporator and that this will condense at approximately the same temperature as it boiled, since pressure changes are small,

$$q_2 = U_2A_2(T_1 - T_2) = U_2A_2\Delta T_2$$

in which the subscripts 2 indicate the conditions in the second evaporator.

If the evaporators are working in balance, then all of the vapours from the first effect are condensing and in their

turn evaporating vapours in the second effect. Also assuming that heat losses can be neglected, there is no appreciable boiling-point elevation of the more concentrated solution, and the feed is supplied at its boiling point,

$$q_1 = q_2$$

Further, if the evaporators are so constructed that $A_1 = A_2$, the foregoing equations can be combined.

$$U_2/U_1 = \Delta T_1/\Delta T_2. \qquad (8.2)$$

Equation (8.2) states that the temperature differences are inversely proportional to the overall heat transfer coefficients in the two effects. This analysis may be extended to any number of effects operated in series, in the same way.

Feeding of Multiple Effect Evaporators

In a two effect evaporator, the temperature in the steam chest is higher in the first than in the second effect. In order that the steam provided by the evaporation in the first effect will boil off liquid in the second effect, the boiling temperature in the second effect must be lower and so that effect must be under lower pressure.

Consequently, the pressure in the second effect must be reduced below that in the first. In some cases, the first effect may be at a pressure above atmospheric; or the first effect may be at atmospheric pressure and the second and subsequent effects have therefore to be under increasingly lower pressures. Often many of the later effects are under vacuum. Under these conditions, the liquid feed progress is simplest if it passes from effect one to effect two, to effect three, and so on, as in these circumstances the feed will flow without pumping. This is called **forward feed**. It means that the most concentrated liquids will occur in the last effect. Alternatively, feed may pass in the reverse direction, starting in the last effect and proceeding to the first, but in this case the liquid has to be pumped from one effect to the next against the pressure drops. This is called **backward feed** and because the concentrated viscous liquids can be handled at the highest temperatures in the first effects it usually offers larger evaporation capacity than forward feed systems, but it may be disadvantageous from the viewpoint of product quality.

Advantages of Multiple Effect Evaporators

At first sight, it may seem that the multiple effect evaporator has all the advantages, the heat is used over and over again and we appear to be getting the evaporation in the second and subsequent effects for nothing in terms of energy costs. Closer examination shows, however, that there is a price to be paid for the heat economy.

In the first effect, $q_1 = U_1A_1\Delta T_1$ and in the second effect, $q_2 = U_2A_2\Delta T_2$.

We shall now consider a single-effect evaporator, working under the same pressure as the first effect

$q_s = U_sA_s\Delta T_s$, where subscript s indicates the single-effect evaporator.

Since the overall conditions are the same, $\Delta T_s = \Delta T_1 + \Delta T_2$, as the overall temperature drop is between the steam-condensing temperature in the first effect and the evaporating temperature in the second effect. Each successive steam chest in the multiple-effect evaporator condenses at the same temperature as that at which the previous effect is evaporating.

Now, consider the case in which $U_1 = U_2 = U_s$, and $A_1 = A_2$. The problem then becomes to find A_s for the single-effect evaporator that will evaporate the same quantity as the two effects.

From the given conditions and from eqn. (8.2),

$$\Delta T_1 = \Delta T_2$$

$$\text{and } \Delta T_s = \Delta T_1 + \Delta T_2 = 2\Delta T_1$$

$$\Delta T_1 = 0.5\Delta T_s$$

$$\text{Now } q_1 + q_2 = U_1A_1\Delta T_1 + U_2A_2\Delta T_2$$

$$= U_1(A_1 + A_2)\ \Delta T_s/2$$

$$\text{but } q_1 + q_2 = q_s$$

$$\text{and } q_s = UA_s\Delta T_s$$

so that $(A_1 + A_2)/2 = 2A_1/2 = A_s$

That is $A_1 = A_2 = A_s$

The analysis shows that if the same total quantity is to be evaporated, then the heat transfer surface of each of the two effects must be the same as that for a single effect evaporator working between the same overall conditions. The analysis can be extended to cover any number of effects and leads to the same conclusions. In multiple effect evaporators, steam economy has to be paid for by increased capital costs of the evaporators. Since the heat transfer areas are generally equal in the various effects and since in a sense what you are buying in an evaporator is suitable heat transfer surface, the *n* effects will cost approximately *n* times as much as a single effect.

4. a.) Explain with a neat sketch about the long tube evaporator.

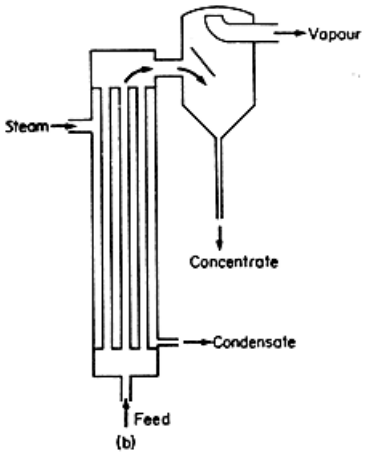

Tall slender vertical tubes may be used for evaporators as shown in Fig. 8.4(b). The tubes, which may have a length to diameter ratio of the order of 100:1, pass vertically upward inside the steam chest. The liquid may either pass down through the tubes, called a falling- ilm evaporator, or be carried up by the evaporating liquor in which case it is called a climbing-film evaporator. Evaporation occurs on the walls of the tubes. Because circulation rates are high and the surface films are thin, good conditions are obtained for the concentration of heat sensitive liquids due to high heat transfer rates and short heating times.

Generally, the liquid is not recirculated, and if sufficient evaporation does not occur in one pass, the liquid is fed to another pass. In the climbing-film evaporator, as the liquid boils on the inside of the tube slugs of vapour form and this vapour carries up the remaining liquid which continues to boil. Tube diameters are of the order of 2.5 to 5 cm, contact times may be as low as 5-10 sec. Overall heat- transfer coefficients may be up to five times as great as from a heated surface immersed in a boiling liquid. In the falling-film type, the tube diameters are rather greater, about 8 cm, and these are specifically suitable for viscous liquids.

b.) Explain the operation of forced circulation evaporator with a neat sketch.

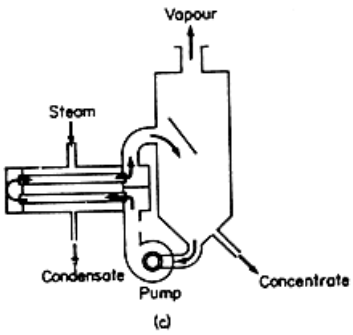

The heat transfer coefficients from condensing steam are high, so that the major resistance to heat flow in an evaporator is usually in the liquid film. Tubes are generally made of metals with a high thermal conductivity, though scale formation may occur on the tubes which reduce the tube conductance.

The liquid-film coefficients can be increased by improving the circulation of the liquid and by increasing its velocity of flow across the heating surfaces. Pumps, or impellers, can be fitted in the liquid circuit to help with this. Using pump circulation, the heat exchange surface can be divorced from the boiling and separating sections of the evaporator, as shown in Fig.8.4(c). Alternatively, impeller blades may be inserted into flow passages such as the downcomer of a calandria- type evaporator. Forced circulation is used particularly with viscous liquids: it may also be worth consideration for expensive heat exchange surfaces when these are required because of corrosion or hygiene requirements. In this case it pays to obtain the greatest possible heat flow through each square metre of heat exchange surface.

Also under the heading of forced-circulation evaporators are various scraped surface and agitated film evaporators. In one type the material to be evaporated passes down over the interior walls of a heated cylinder and it is scraped by rotating scraper blades to maintain a thin film, high heat transfer and a short and controlled residence time exposed to heat.

5. **Describe in detail about the constant rate and constant pressure filtration and filter cake compressibility.**

Constant-rate Filtration

In the early stages of a filtration cycle, it frequently happens that the filter resistance is large relative to the resistance of the filter cake because the cake is thin. Under these circumstances, the resistance offered to the flow is virtually constant and so filtration proceeds at a more or less constant rate. Equation (7.5) can then be integrated to give the quantity of liquid passed through the filter in a given time. The terms on the right-hand side of eqn. (7.5) are constant so that integration is very simple:

$$\int dV/A dt = V/At = \Delta P/\mu r[w(V/A) + L]$$

or

$$\Delta P = V/At \times \mu r[w(V/A)+L]$$

From eqn. the pressure drop required for any desired flow rate can be found. Also, if a series of runs is carried out under different pressures, the results can be used to determine the resistance of the filter cake.

Constant-pressure Filtration

Once the initial cake has been built up, and this is true of the greater part of many practical filtration operations, flow occurs under a constant-pressure differential. Under these conditions, the term ΔP in eqn. (7.5) is constant and so

$$\mu r[w(V/A) + L]dV = A\Delta P dt$$

and integration from $V = 0$ at $t = 0$, to $V = V$ at $t = t$

$\mu r[w(V^2/2A) + LV] = A\Delta Pt$ and rewriting this

$$tA/V = [\mu rw/2\Delta P] \times (V/A) + \mu rL/\Delta P$$

$$t / (V/A) = [\mu rw/2\Delta P] \times (V/A) + \mu rL/\Delta P$$

Equation is useful because it covers a situation that is frequently found in a practical filtration plant. It can be used to predict the performance of filtration plant on the basis of experimental results. If a test is carried out using constant pressure, collecting and measuring the filtrate at measured time intervals, a **filtration graph** can be plotted of $t/(V/A)$ against (V/A) and from the statement of eqn it can be seen that this graph should be a straight line. The slope of this line will correspond to $\mu rw/2\Delta P$ and the intercept on the $t/(V/A)$ axis will give the value of $\mu rL/\Delta P$. Since, in general, μ, w, ΔP and A are known or can be measured, the values of the slope and intercept on this graph enable L and r to be calculated.

With some filter cakes, the specific resistance varies with the pressure drop across it. This is because the cake becomes denser under the higher pressure and so provides fewer and smaller passages for flow. The effect is spoken of as the compressibility of the cake. Soft and flocculent materials provide highly compressible filter cakes, whereas hard granular materials, such as sugar and salt crystals, are little affected by pressure. To allow for cake compressibility the empirical relationship has been proposed:

$$r = r'\Delta P^s$$

where r is the specific resistance of the cake under pressure P, ΔP is the pressure drop across the filter, r' is the specific resistance of the cake under a pressure drop of 1 atm and s is a constant for the material, called its compressibility. This expression for r can be inserted into the filtration equations, such as eqn.,and values for r' and s can be determined by carrying out experimental runs under various pressures.

6.Explain with neat sketch of Plate and frame filter press with its advantages and disadvantages.

In the plate and frame filter press, a cloth or mesh is spread out over plates which support the cloth along ridges but at the same time leave a free area, as large as possible, below the cloth for flow of the filtrate. This is illustrated in **Fig** The plates with their filter cloths may be horizontal, but they are more usually hung vertically with a number of plates operated in parallel to give sufficient area.

Filter cake builds up on the upstream side of the cloth, that is the side away from the plate. In the early stages of the filtration cycle, the pressure drop across the cloth is small and filtration proceeds at more or less a constant rate. As the cake increases, the process becomes more and more a constant-pressure one and this is the case throughout most of the cycle. When the available space between successive frames is filled with cake, the press has to be dismantled and the cake scraped off and cleaned, after which a further cycle can be initiated.

The plate and frame filter press is cheap but it is difficult to mechanize to any great extent. Variants of the plate and frame press have been developed which allow easier discharging of the filter cake. For example, the plates, which may be rectangular or circular, are supported on a central hollow shaft for the filtrate and the whole assembly enclosed in a pressure tank containing the slurry. Filtration can be

done under pressure or vacuum. The advantage of vacuum filtration is that the pressure drop can be maintained whilst the cake is still under atmospheric pressure and so can be removed easily. The disadvantages are the greater costs of maintaining a given pressure drop by applying a vacuum and the limitation on the vacuum to about 80 kPa maximum. In pressure filtration, the pressure driving force is limited only by the economics of attaining the pressure and by the mechanical strength of the equipment.

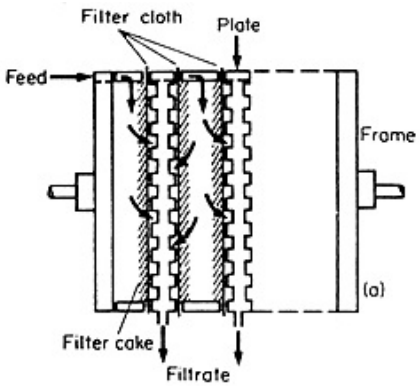

Advantages:

- Construction of filter press is very simple and a variety ofmaterials can be used.

I. Cast iron – for handling common substances.
II. Bronze - for smaller units.
III. Stainless steel – contamination can be avoided.
IV. Hard rubber and plastic- used where metals must be avoided.
V. Wood- for lightness though it must be kept wet.

- Provide large filtration area in relatively small floor space. The capacity being variable according to thickness of frames and number used.
- Sturdy construction permits the use of considerable pressure difference. (2000 Kilopascals normally used)
- Efficient washing of cake is possible.
- Operation and maintenance is easy.

Disadvantages:

- It is a batch filter, so it is a time consuming.
- The filter press is an expensive filter, the emptying time, the labour involved, and the wear and tear on the cloths resulting in high costs.
- Operation is critical, as the frames should be full, otherwise washing is inefficient and the cake is difficult to remove.
- The filter press is used for slurries containing less about 5 % solids
- In view of the high labourcosts , it is most suitable for expensive materials e.g. the removal of precipitated proteins from insulin liquors.

7.Explain the construction and working of rotary drum filter with neat sketch and discuss the advantages, disadvantages and its uses.

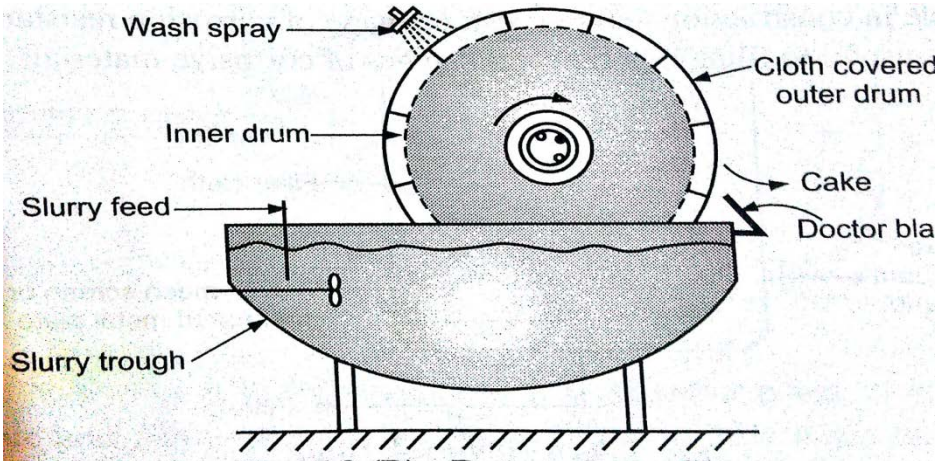

Fig. 5.9 (B) : Rotary drum filter

❖ ***Construction :-***

- A Rotary drum filter is from 50 to 400 cm in diameter and 50 to 800 cm long.
- Outer surface is formed of Plate and which turns at 0.1 to 2 r/min.
- Inside the outer drum, there is a smaller drum with a solid surface.
- The annular space between the two drum is divided into number of components by radial partitions and separate connection.
- As the drum rotates , vacuum and air are alternately applied to each compartment.

❖ ***Working :-***

- The drum is immersed to desired depth in the slurry.
- Vacuum is then applied to the portion of drum which is submerged in the slurry through the rotary valve.
- The liquid (filtrate) is sucked into the compartment and solid get deposited on the cloth drum.
- It is higher speeds and high rate of filtration will be achieved.
- The filtrate from the compartment than goes to a filtrate collecting tank through the internal pipe and rotary valve.
- Cake is formed comes out of slurry , the cake is washed by spraying wash liquid.
- The wash liquid leaves the filter through the rotary valve and is collecting separately in a separate tank.
- After washing ,cake enter into a drying zone as the drum rotates where the cake is dry by solid.
- Vacuum is cut off and the cake is removed by scrapping it off using a adjustable doctor blade.
- Once the cake is removed from the drum sector , it re-enter the slurry and the cycle is

repeated.

Advantages:

- The rotary filter is automatic and is continuous in operation, so that the labour costs are very low.
- The filter has a large capacity , so it is suitable for the filtration of highly concentrated solutions.
- Variation of the speed of rotation enables the cake thickness to be controlled.
- Filter has large surface area.

Disadvantages:

- The rotary filter is a complex piece of equipment , with many moving parts and is very expensive,.
- In addition to the filter itself, some accessories are connected ,e.g., a vacuum pump, vacuum receivers, slurry pumps and agitators are required .
- The cake tends to crack due to the air drawn through by the vacuum system, so that washing and drying are not efficient.
- Being a vacuum filter, the pressure difference is limited to 1 bar and hot filtrates may boil.
- It is suitable only for straight- forward slurries

Uses:

- The rotary filter for continuous operation on large quantities of slurry.
- Suitable for slurry contains considerable amounts of solids in the range 15-30%.
- Examples of pharmaceutical application include

- The collection of calcium carbonate, magnesium carbonate, and starch.
- The separation of the mycelium from the fermentation liquor in the manufacture of antibiotics.

8. a.) Explain with a neat sketch about the sedimentation equipment.

Sedimentation Equipment for separation of solid particles from liquids by gravitational sedimentation is designed to provide sufficient time for the sedimentation to occur and to permit the overflow and the sediment to be removed without disturbing the separation. Continuous flow through the equipment is generally desired, so the flow velocities have to be low enough to avoid disturbing the sediment. Various shaped vessels are used, with a sufficient cross-section to keep the velocities down and fitted with slow-speed scraper-conveyors and pumps to remove the settled solids. When vertical cylindrical tanks are used, the scrapers generally rotate about an axis in the centre of the tank and the overflow may be over a weir round the periphery of the tank, as shown diagrammatically in **Fig.**.

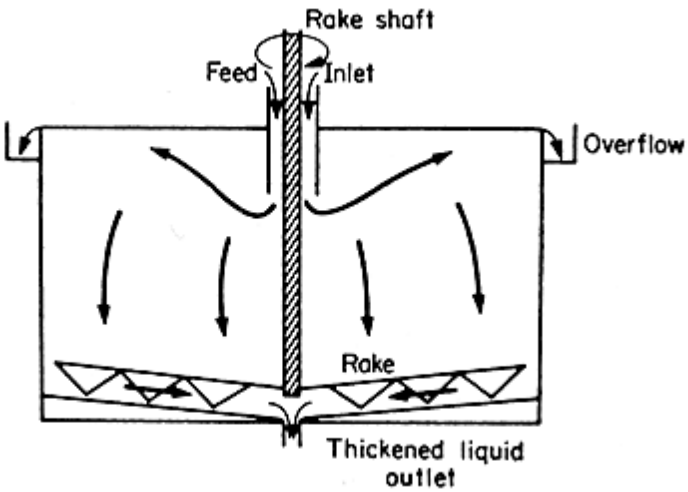

Figure. Continuous-sedimentation plant

Flotation

In some cases, where it is not practicable to settle out fine particles, these can sometimes be floated to the surface by the use of air bubbles. This technique is known as flotation and it depends upon the relative tendency of air and water to adhere to the particle surface. The water at the particle surface must be displaced by air, after which the buoyancy of the air is sufficient to carry both the particle and the air bubble up through the liquid.

Because it depends for its action upon surface forces, and surface forces can be greatly changed by the presence of even minute traces of surface active agents, flotation may be promoted by the use of suitable additives. In some instances, the air bubbles remain round the solid particles and cause froths. These are produced in vessels fitted with mechanical agitators, the agitators whip up the air-liquid mixture and overflow the froth into collecting troughs.

The greatest application of froth flotation is in the concentration of minerals, but one use in the food industry is in the separation of small particles of fat from water. Dissolving the air in water under pressure provides the froth. On the pressure being suddenly released, the air comes out of solution in the form of fine bubbles which rise and carry the fat with them to surface scrapers.

b.) i) Describe about the Gravitational Sedimentation of Particles in a Liquid

Solids will settle in a liquid whose density is less than their own. At low concentration, Stokes' Law will apply but in many practical instances the concentrations are too high.

In a cylinder in which a uniform suspension is allowed to settle, various quite well-defined **zones** appear as the settling proceeds. At the top is a zone of clear liquid. Below this is a zone of more or less constant composition, constant because of the uniform settling velocity of all sizes of particles. At the bottom of the cylinder is a zone of sediment, with the larger particles lower down. If the size range of the particles is wide, the zone of constant composition near the top will not occur and an extended zone of variable composition will replace it.

In a continuous thickener, with settling proceeding as the material flows through, and in which clarified liquid is being taken from the top and sludge from the bottom, these same zones occur. The minimum area necessary for a continuous thickener can be calculated by equating the rate of sedimentation in a particular zone to the counter-flow **velocity of the rising fluid**. In this case we

have:

$$v_u = (F - L)(dw/dt)/A\rho$$

where v_u is the upward velocity of the flow of the liquid, F is the mass ratio of liquid to solid in the feed, L is the mass ratio of liquid to solid in the underflow liquid, dw/dt is the mass rate of feed of the solids, ρ is the density of the liquid and A is the settling area in the tank.
If the settling velocity of the particles is v, then $v_u = v$ and, therefore:

$$A = (F - L)(dw/dt)/v\rho$$

The same analysis applies to particles (droplets) of an immiscible liquid as to solid particles. Motion between particles and fluid is relative, and some particles may in fact rise.

ii) A continuous separating tank is to be designed to follow after a water washing plant for liquid oil. Estimate the necessary area for the tank if the oil, on leaving the washer, is in the form of globules 5.1 x 10^{-5} m diameter, the feed concentration is 4 kg water to 1 kg oil, and the leaving water is effectively oil free. The feed rate is 1000 kg h^{-1}, the density of the oil is 894 kg m^{-3} and the temperature of the oil and of the water is 38°C. Assume Stokes' Law.

Given: Viscosity of water = 0.7 x 10^{-3} N s m^{-2}.
Density of water = 1000 kg m^{-3}.

9. Draw a neat sketch of centrifugal filter and discuss in detail about it and brief about what are air filters.

Centrifugal filters

A centrifugal or centrifuge is any rotating machine in which centrifugal force is utilised for phase separation.

The essential components of machine are:

1. A rotor in which centrifugal force is applied

2. A drive shaft

3. A drive mechanism. e.g. Electric motor

4. A frame for support

5. Casing

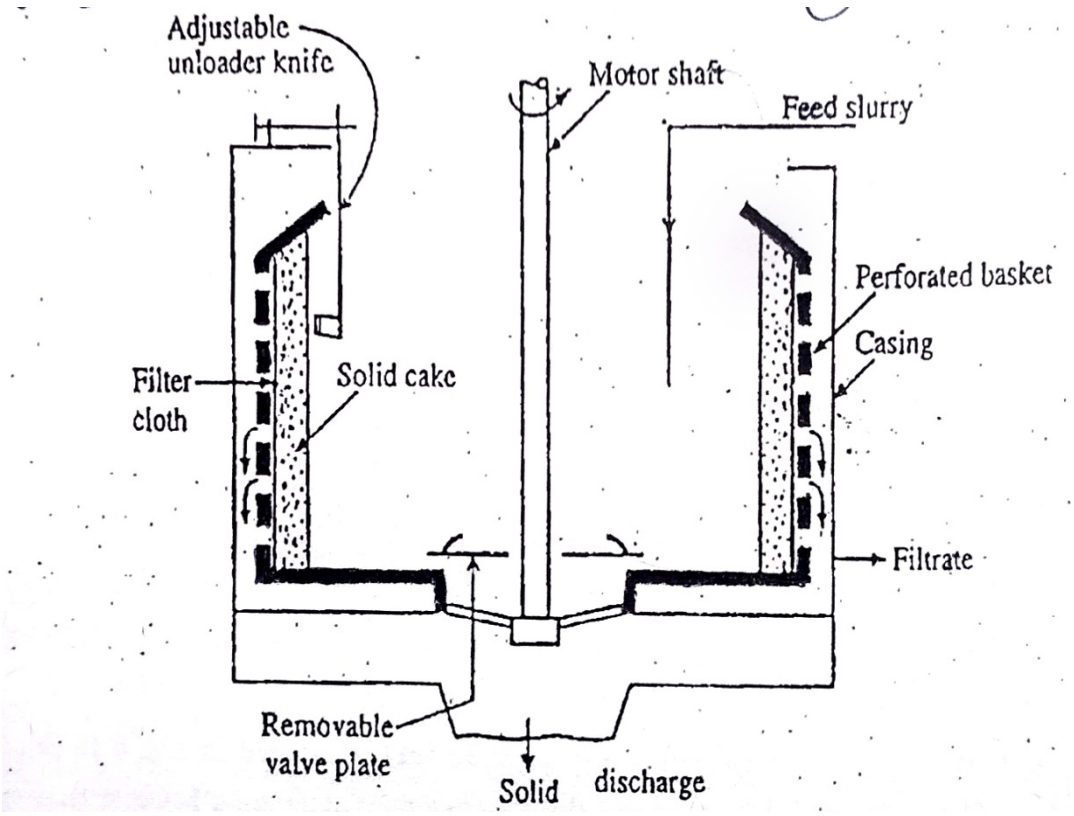

Construction:-

- It consists of a basket with perforated sides.
- Diameter of basket ranges from 750-1200 mm and depth from 450-750 mm.
- Basket rotates at speeds between 600-1800 rpm.
- The shaft is driven from above by electric motor.
- The filter medium is placed around inside surface of basket.
- The basket and other parts may be constructed of mild steel, monel and stainless.

Working:-

- Accelerate the machine upto speed suitable for feeding.
- Feed the slurry to be filtered.
- Accelerate the machine to full speed for deliquoring.
- Apply wash liquor to the filter cake.
- Spin to dryness.
- Decelerate to unloading speed.
- Unload

Advantages:-

- Compact and occupy very small space.
- Very high separating efficiency.

Disadvantages:-

- Construction is complicated.

- Capacity is limited.
- Not suitable for cake forming solids.

Air filters

Filters are used quite extensively to remove suspended dust or particles from air streams. The air or gas moves through a fabric and the dust is left behind. These filters are particularly useful for the removal of fine particles. One type of bag filter consists of a number of vertical cylindrical cloth bags 15-30 cm in diameter, the air passing through the bags in parallel. Air bearing the dust enters the bags, usually at the bottom and the air passes out through the cloth. A familiar example of a bag filter for dust is to be found in the domestic vacuum cleaner. Some designs of bag filters provide for the mechanical removal of the accumulated dust. For removal of particles less than 5 □m diameter in modern air sterilization units, paper filters and packed tubular filters are used. These cover the range of sizes of bacterial cells and spores.

10. Summarize about settling under combined forces by explaining about the cyclones, impingement separators and classifiers.

It is sometimes convenient to combine more than one force to effect a mechanical separation. In consequence of the low velocities, especially of very small particles, obtained when gravity is the only external force acting on the system, it is well worthwhile to also employ centrifugal forces. Probably the most common application of this is the cyclone separator. Combined forces are also used in some powder classifiers such as the rotary mechanical classifier and in ring dryers.

Cyclones

Cyclones are often used for the removal from air streams of particles of about 10 µm or more diameter. They are also used for separating particles from liquids and for separating liquid droplets from gases. The cyclone is a settling chamber in the form of a vertical cylinder, so arranged that the particle-laden air spirals round the cylinder to create centrifugal forces which throw the particles to the outside walls. Added to the gravitational forces, the centrifugal action provides reasonably rapid settlement rates. The spiral path, through the cyclone, provides sufficient separation time. A cyclone is illustrated in Fig. **10.2(a)**.

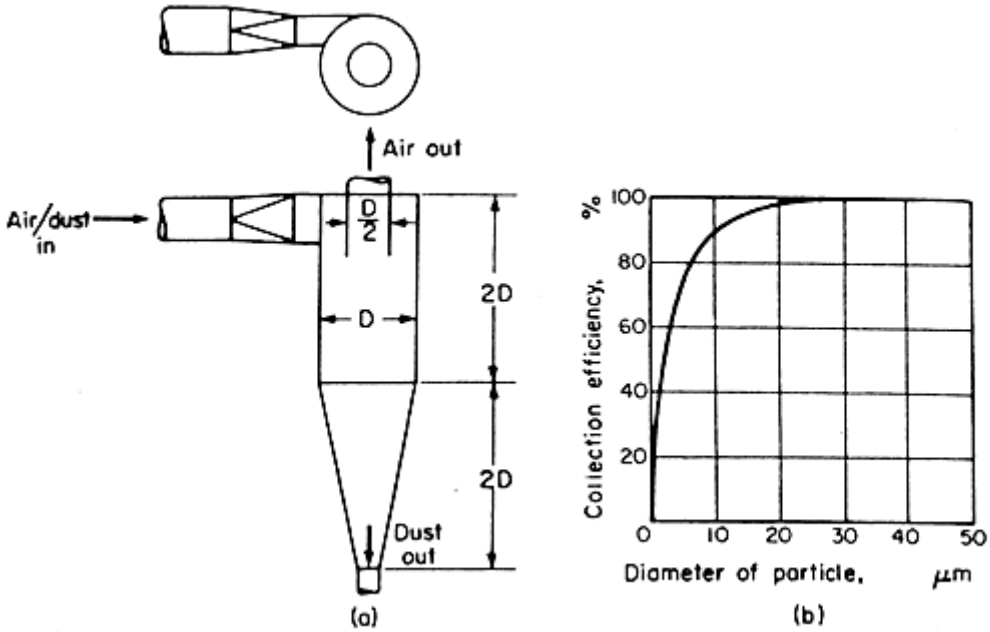

Figure 10.2 Cyclone separator: (a) equipment (b) efficiency of dust collection

Stokes' Law shows that the terminal velocity of the particles is related to the force acting. In a centrifugal separator, such as a cyclone, for a particle, rotating round the periphery of the cyclone:

$$F_c = (mv^2)/r \qquad (10.4)$$

where F_c is the centrifugal force acting on the particle, m is the mass of the particle, v is the tangential velocity of the particle and r is the radius of the cyclone.

This equation shows that the force on the particle increases as the radius decreases, for a fixed velocity. Thus, the most efficient cyclones for removing small particles are those of smallest diameter. The limitations on the smallness of the diameter are the capital costs of small diameter cyclones to provide sufficient output, and the pressure drops.

The **optimum shape** for a cyclone has been evolved mainly from experience and proportions similar to those indicated in Fig. 10.2(a) have been found effective. The efficient operation of a cyclone depends very much on a smooth double helical flow being produced and anything which creates a flow disturbance or tends to make the flow depart from this pattern will have considerable and adverse effects upon efficiency. For example, it is important that the air enters tangentially at the top. Constricting baffles or lids should be avoided at the outlet for the air.

The **efficiency** of collection of dust in a cyclone is illustrated in Fig. 10.2(b). Because of the complex flow, the size cut of particles is not sharp and it can be seen that the percentage of entering particles which are retained in the cyclone falls off for particles below about 10 μm diameter. Cyclones can be used for separating particles from liquids as well as from gases and also for separating liquid droplets from gases.

Impingement separators

Other mechanical flow separators for particles in a gas use the principal of impingement in which deflector plates or rods, normal to the direction of flow of the stream, abruptly change the direction of flow. The gas recovers its direction of motion more rapidly than the particles because of its lower inertia. Suitably placed collectors can then be arranged to collect the particles as they are thrown out of the stream. This is the principle of operation of mesh and fibrous air filters. Various adaptations of impingement and settling separators can be adapted to remove particles from gases, but where the particle diameters fall below about 5 μm, cloth filters and packed tubular filters are about the only satisfactory equipment.

Classifiers

Classification implies the sorting of particulate material into size ranges. Use can be made of the different rates of movement of particles of different sizes and densities suspended in a fluid and differentially affected by imposed forces such as gravity and centrifugal fields, by making suitable arrangements to collect the different fractions as they move to different regions.

Rotary mechanical classifiers, combining differential settling with centrifugal action to augment the force of gravity and to channel the size fractions so that they can be collected, have come into increasing use in flour milling. One result of this is that because of small differences in sizes, shapes and densities between starch and protein-rich material after crushing, the flour can be classified into protein-rich and starch-rich fractions. Rotary mechanical classifiers can be used for other large particle separation in gases.

Classification is also employed in direct air dryers, in which use is made of the density decrease of material on drying. Dry material can be sorted out as a product and wet material returned for further drying. One such dryer uses a scroll casing through which the mixed material is passed, the wet particles pass to the outside of the casing and are recycled while the material in the centre is removed as dry product.

11. a.) Explain in detail what is centrifugal separation with a diagram.

The separation by sedimentation of two immiscible liquids, or of a liquid and a solid, depends on the effects of gravity on the components. Sometimes this separation may be very slow because the specific gravities of the

components may not be very different, or because of forces holding the com-ponents in association, for example as occur in emulsions. Also, under circumstances when sedimentation does occur there may not be a clear demarcation between the components but rather a merging of the layers.

For example, if whole milk is allowed to stand, the cream will rise to the top and there is eventually a clean separation between the cream and the skim milk. However, this takes a long time, of the order of one day, and so it is suitable, perhaps, for the farm kitchen but not for the factory.

Much greater forces can be obtained by introducing centrifugal action, in a centrifuge. Gravity still acts and the net force is a combination of the centrifugal force with gravity as in the cyclone. Because in most industrial centrifuges, the centrifugal forces imposed are so much greater than gravity, the effects of gravity can usually be neglected in the analysis of the separation.

The **centrifugal force** on a particle that is constrained to rotate in a circular path is given by

$$F_c = mr\omega^2 \qquad (10.5)$$

where F_c is the centrifugal force acting on the particle to maintain it in the circular path, r is the radius of the path, m is the mass of the particle, and ω(omega) is the **angular velocity of the particle**.

Or, since $\omega = v/r$, where v is the **tangential velocity of the particle**

$$F_c = (mv^2)/r \qquad (10.6)$$

Rotational speeds are normally expressed in revolutions per minute, so that eqn. (10.6) can also be written, as $\omega = 2\pi N/60$ (as it has to be in $s^{-}1$, divide by 60)

$$F_c = mr(2\pi N/60)^2 = 0.011\, mrN^2 \qquad (10.7)$$

where N is the rotational speed in revolutions per minute.

If this is compared with the force of gravity (F_g) on the particle, which is $F_g = mg$, it can be seen that the centrifugal acceleration, equal to $0.011\, rN^2$, has replaced the gravitational acceleration, equal to g. The centrifugal force is often expressed for comparative purposes as so many "g".

The centrifugal force depends upon the radius and speed of rotation and upon the mass of the particle. If the radius and the speed of rotation are fixed, then the controlling factor is the weight of the particle so that the heavier the particle the greater is the centrifugal force acting on it. Consequently, if two liquids, one of which is twice as dense as the other, are placed in a bowl and the bowl is rotated about a vertical axis at high speed, the centrifugal force per unit volume will be twice as great for the heavier liquid as for the lighter. The heavy liquid will therefore move to occupy the annulus at the periphery of the bowl and it will displace the lighter liquid towards the centre. This is the principle of the centrifugal liquid separator, illustrated diagrammatically in **Fig. 10.3**.

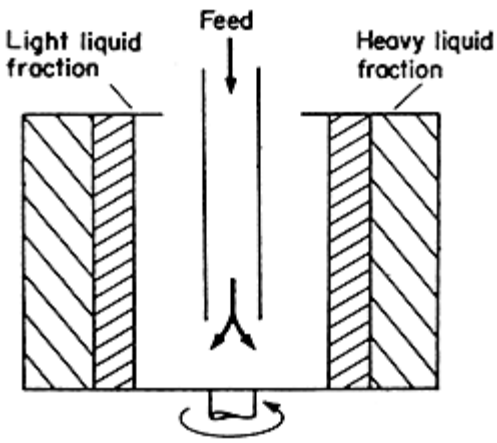

Figure 10.3 Liquid separation in a centrifuge

b.) Derive the equation for the Rate of separation in a centrifuge.

The steady-state velocity of particles moving in a streamline flow under the action of an accelerating force is, from eqn. (10.1),

$$v_m = D^2 a(\rho_p - \rho_f) / 18\mu$$

If a streamline flow occurs in a centrifuge we can write, from eqns. (10.6) and (10.7) as a is the tangential acceleration;:

$$F_c = ma$$
$$F_c/m = a = r(2\pi N/60)^2$$

so that

$$v_m = D^2 r(2\pi N/60)^2(\rho_p - \rho_f) / 18\mu$$

$$= D^2 N^2 r(\rho_p - \rho_f)/1640\mu \qquad (10.8)$$

12. Demonstrate in detail about the Liquid Separation with its derivation and with a neat sketch.

The separation of one component of a liquid-liquid mixture, where the liquids are immiscible but finely dispersed, as in an emulsion, is a common operation in the food industry. It is particularly common in the dairy industry in which the emulsion, milk, is separated by a centrifuge into skim milk and cream. It seems worthwhile, on this account, to examine the position of the two phases in the centrifuge as it operates. The milk is fed continuously into the machine, which is generally a bowl rotating about a vertical axis, and cream and skim milk come from the respective discharges. At some point within the bowl there must be a surface of separation between cream and the skim milk.

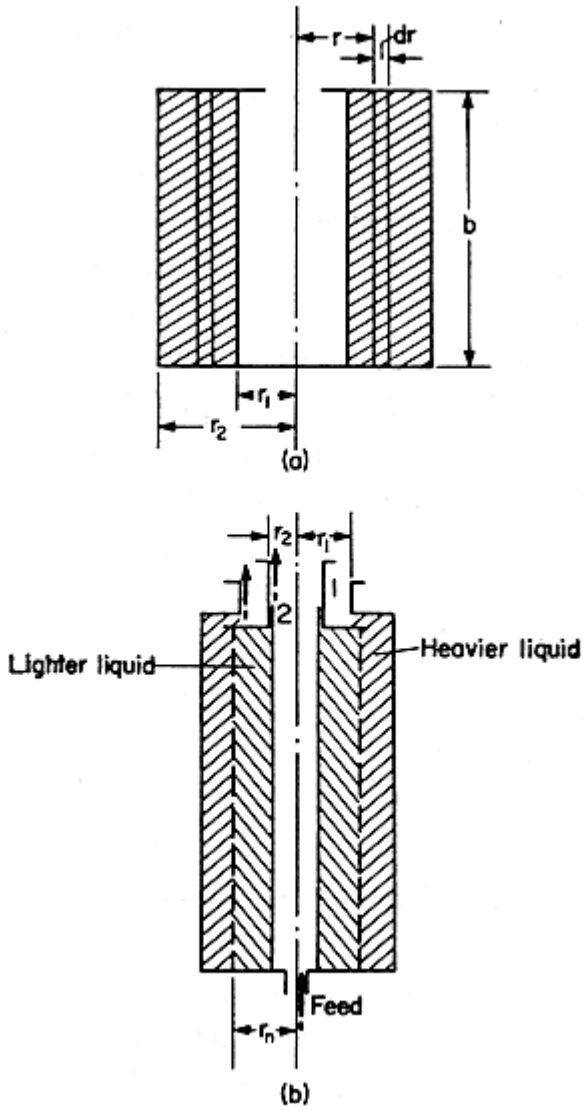

Figure 10.4 Liquid centrifuge (a) pressure difference (b) neutral zone

Consider a thin differential cylinder, of thickness d*r* and height *b* as shown in Fig. 10.4(a): the differential centrifugal force across the thickness d*r* is given by equation (10.5):

$$dF_c = (dm)r\omega^2$$

where dF_c is the differential force across the cylinder wall, d*m* is the mass of the differential cylinder, ω is the angular velocity of the cylinder and *r* is the radius of the cylinder. But,

$$dm = 2\pi\rho rbdr$$

where ρ is the density of the liquid and *b* is the height of the cylinder. The area over which the force dF_c acts is $2\pi rb$, so that:

$$dF_c / 2\pi rb = dP = \rho\omega^2 rdr$$

where dP is the differential pressure across the wall of the differential cylinder.

To find the differential pressure in a centrifuge, between radius r_1 and r_2, the equation for d*P* can be integrated, letting the pressure at radius r_1 be P_1 and that at r_2 be P_2, and so

$$P_2 - P_1 = \rho\omega^2 (r_2^2 - r_1^2)/2 \qquad (10.9)$$

Equation (10.9) shows the **radial variation in pressure** across the centrifuge.

Consider now Fig. 10.4(b), which represents the bowl of a vertical continuous liquid centrifuge. The feed enters the centrifuge near to the axis, the heavier liquid *A* discharges through the top opening 1 and the lighter liquid *B* through the opening 2. Let r_1 be the radius at the discharge pipe for the heavier liquid and r_2 that for the lighter liquid. At some other radius r_n there will be a separation between the two phases, the heavier and the lighter. For the system to be in hydrostatic balance, the pressures of each component at radius r_n must be equal, so that applying eqn. (10.9) to find the pressures of each component at radius r_n, and equating these we have:

$$\rho_A\omega^2 (r_n^2 - r_1^2)/2 = \rho_B\omega^2(r_n^2 - r_2^2)/2$$

$$r_n^2 = (\rho_A r_1^2 - \rho_B r_2^2) / (\rho_A - \rho_B) \qquad (10.10)$$

where ρ_A is the density of the heavier liquid and ρ_B is the density of the lighter liquid.

Equation (10.10) shows that as the discharge radius for the heavier liquid is made smaller, then the **radius of the neutral zone** must also decrease. When the neutral zone is nearer to the central axis, the lighter component is exposed only to a relatively small centrifugal force compared with the heavier liquid. This is applied where, as in the separation of cream from milk, as much cream as possible is to be removed and the neutral radius is therefore kept small. The feed to a centrifuge of this type should be as nearly as possible into the neutral zone so that it will enter with the least disturbance of the system. This relationship can, therefore, be used to place the feed inlet and the product outlets in the centrifuge to get maximum separation.

13. Explain in detail about the Centrifuge Equipment with a neat diagram.

The simplest form of centrifuge consists of a bowl spinning about a vertical axis, as shown in Fig. 10.4(a). Liquids, or liquids and solids, are introduced into this and under centrifugal force the heavier liquid or particles pass to the outermost regions of the bowl, whilst the lighter components move towards the centre.

If the feed is all liquid, then suitable collection pipes can be arranged to allow separation of the heavier and the lighter components. Various arrangements are used to accomplish this collection effectively and with a minimum of disturbance to the flow pattern in the machine. To understand the function of these collection arrangements, it is very often helpful to think of the centrifuge action as analogous to gravity settling, with the various weirs and overflows acting in just the same way as in a settling tank even though the centrifugal forces are very much greater than gravity.

In liquid/liquid separation centrifuges, conical plates are arranged as illustrated in **Fig. 10.5(a)** and these give smoother flow and better separation.

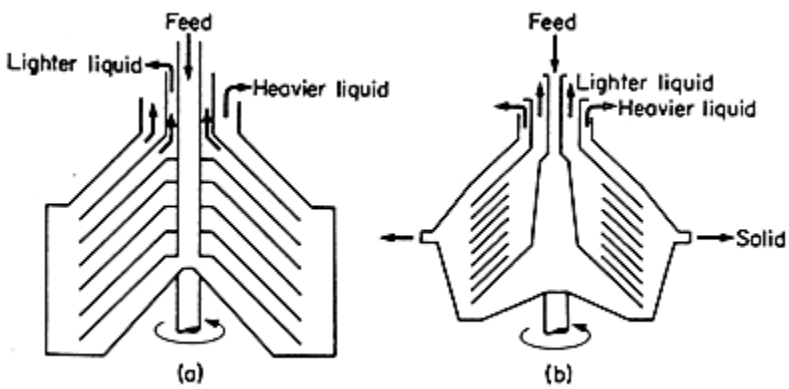

FIG. 10.5 Liquid centrifuges: (a) conical bowl, (b) nozzle

Whereas liquid phases can easily be removed from a centrifuge, solids present much more of a problem.

In liquid/solid separation, stationary ploughs cannot be used as these create too much disturbance of the flow pattern on which the centrifuge depends for its separation. One method of handling solids is to provide nozzles on the circumference of the centrifuge bowl as illustrated in Fig. 10.5(b). These nozzles may be opened at intervals to discharge accumulated solids together with some of the heavy liquid. Alternatively, the nozzles may be open continuously relying on their size and position to discharge the solids with as little as possible of the heavier liquid. These machines thus separate the feed into three streams, light liquid, heavy liquid and solids, the solids carrying with them some of the heavy liquid as well. Another method of handling solids from continuous feed is to employ telescoping action in the bowl, sections of the bowl moving over one another and conveying the solids that have accumulated towards the outlet, as illustrated in **Fig. 10.6(a)**.

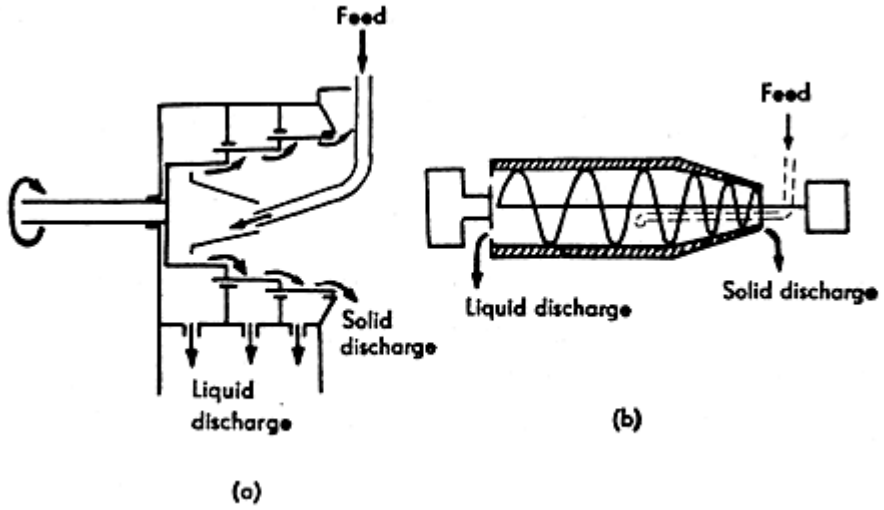

FIG. 10.6 Liquid/solid centrifuges (a) telescoping bowl, (b) horizontal bowl, scroll discharge

The horizontal bowl with scroll discharge, centrifuge, as illustrated in Fig.10.6(b) can discharge continuously. In this machine, the horizontal collection scroll (or screw) rotates inside the conical-ended bowl of the machine and conveys the solids with it, whilst the liquid discharges over an overflow towards the centre of the machine and at the opposite end to the solid discharge. The essential feature of these machines is that the speed of the scroll, relative to the bowl, must not be great. For example, if the bowl speed is 2000 rev/min, a suitable speed for the scroll might be 25 rev/min relative to the bowl which would mean a scroll speed of 2025 or 1975 rev/min. The differential speeds are maintained by gearing between the driving shafts for the bowl and the scroll. These machines can continuously handle feeds with solid contents of up to 30%.

14. i)Explain the new surface formed by grinding in size reduction process

When a uniform particle is crushed, after the first crushing the size of the particles produced will vary a great deal from relatively coarse to fine and even to dust. As the grinding continues, the coarser particles will be further reduced but there will be less change in the size of the fine particles. Careful analysis has shown that there tends to be a certain size that increases in its relative proportions in the mixture and which soon becomes the predominant size fraction. For example, wheat after first crushing gives a wide range of particle sizes in the coarse flour, but after further grinding the predominant fraction soon becomes that passing a 250 μm sieve and being retained on a 125 μm sieve. This fraction tends to build up, however long the grinding continues, so long as the same type of machinery, rolls in this case, is employed.

The surface area of a fine particulate material is large and can be important. Most reactions are related to the surface area available, so the surface area can have a considerable bearing on the properties of the material. For example, wheat in the form of grains is relatively stable so long as it is kept dry, but if ground to a fine flour has such a large surface per unit mass that it becomes liable to explosive oxidation, as is all too well known in the milling industry. The surface area per unit mass is called the **specific surface**. To calculate this in a known

mass of material it is necessary to know the particle-size distribution and, also the shape factor of the particles. The particle size gives one dimension that can be called the typical dimension, D_p, of a particle. This has now to be related to the surface area.

We can write, arbitrarily:

$$V_p = pD_p^3$$

and

$$A_p = 6qD_p^2.$$

where V_p is the volume of the particle, A_p is the area of the particle surface, D_p is the typical dimension of the particle and *p, q* are factors which connect the particle geometries.(Note subscript p and factor *p*)

For example, for a cube, the volume is D_p^3 and the surface area is $6D_p^2$; for a sphere the volume is $(\pi/6)D_p^3$ and the surface area is πD_p^2 In each case the ratio of surface area to volume is $6/D_p$.

A **shape factor** is now defined as $q/p = \lambda$ (lambda), so that for a cube or a sphere $\lambda = 1$. It has been found, experimentally, that for many materials when ground, the shape factor of the resulting particles is approximately 1.75, which means that their surface area to volume ratio is nearly twice that for a cube or a sphere.

The ratio of surface area to volume is:

$$A_p/V_p = (6q/p)D_p = 6\lambda/D_p \qquad (11.5)$$

and so $$A_p = 6q\, V_p/pD_p = 6\lambda(V_P/D^P)$$

If there is a mass *m* of particles of density ρ_p, the number of particles is $m/\rho_p V_P$ each of area A_p.

So total area $$A_t = (m/\rho_p V_P) \times (6qV_p/pD_P) = 6qm/\rho_p pD_p$$
$$= 6\lambda m/\rho D_p \qquad (11.6)$$

where A_t is the total area of the mass of particles. Equation (11.6) can be combined with the results of sieve analysis to estimate the total surface area of a powder.

14.ii)Surface area of salt crystals

In an analysis of ground salt using Tyler sieves, it was found that 38% of the total salt passed through a 7 mesh sieve and was caught on a 9 mesh sieve. For one of the finer fractions, 5% passed an 80 mesh sieve but was retained on a 115 mesh sieve. Estimate the surface areas of these two fractions in a 5 kg sample of the salt, if the density of salt is 1050 kg m^{-3} and the shape factor (λ) is 1.75.

Aperture of Tyler sieves, 7 mesh = 2.83 mm, 9 mesh = 2.00 mm, 80 mesh = 0.177 mm, 115 mesh = 0.125 mm.
Mean aperture 7 and 9 mesh = 2.41 mm = 2.4×10^{-3}m
Mean aperture 80 and 115 mesh = 0.151 mm = 0.151×10^{-3}m
Now from Eqn. (11.6)

$A_1 = (6 \times 1.75 \times 0.38 \times 5)/(1050 \times 2.41 \times 10^{-3})$
$= \underline{7.88\ m^2}$
$A_2 = (6 \times 1.75 \times 0.05 \times 5)/(1050 \times 0.151 \times 10^{-3})$
$= \underline{16.6\ m^2}$.

15.Describe in detail about the size reduction equipment Crushers i.e, Jaw crusher, Gyratory crusher, Smooth roll crusher and Serrated toothed crusher with a neat diagram.

Crushers

- Squeeze or press the material until it breaks
- Mostly used to break large pieces of solid materials into small lumps
- Use of crushers in agricultural operations is limited
- Types
  - Jaw crushers
  - Gyratory crushers

Jaw crusher

- Feed is admitted between two jaws, which are open at the top like V
- One of the jaws is fixed and vertical, while the other is the swinging jaw
- Swinging jaw reciprocates in a horizontal plane and makes the angle of 20-30° with the fixed jaw
- Movable jaw is operated by an eccentric unit so as to impart great compressive force
- Solids which has to be broken is caught between the two jaws
- Large lumps of solid materials are caught between the upper parts of the jaws
- Subsequently broken and dropped into the narrower space below
- Broken pieces are further reduced next time when jaws come closer.
- No. of strokes given to the movable jaw ranges between 250 to 400 times per minute

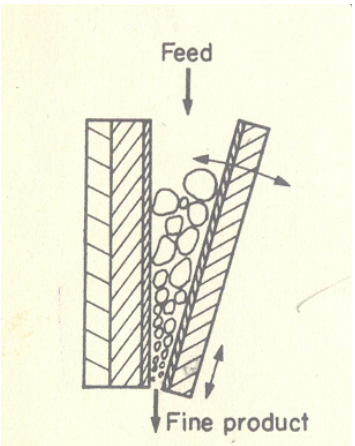

Gyratory crusher

- Jaws between which the solid materials fed are circular
- Material is being crushed at all times at some point
- Solids are caught between V shaped space between the head and casing
- Material is repeatedly broken in sufficiently small pieces to pass out from the bottom.
- Speed of crushing ranges between 125 to 425 gyrations per minute

- Discharge from the gyratory crusher is continuous
- Less maintenance is required as compared to jaw crusher
- Power requirement is low

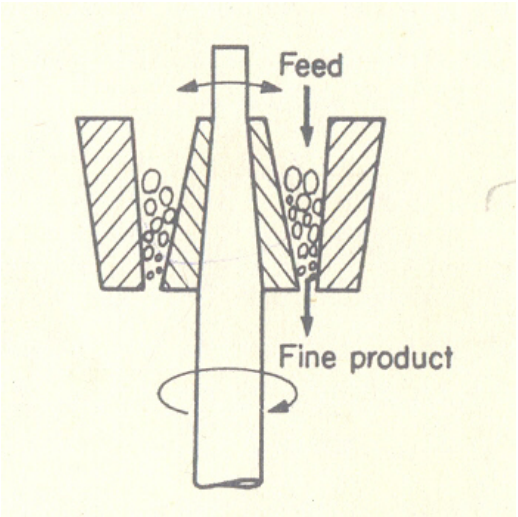

Crushing rolls

- Mainly used for extraction of juice from sugarcane
- Two types
  - Smooth roll crusher
  - Serrated or toothed roll crusher

Smooth roll crusher

- Two heavy smooth faced roll rotating towards each other at same speed on parallel horizontal axes
- Size reduction is by compression alone
- Size of the material caught by the rolls depends upon the coefficient of friction between the material and the roll surface
- $D_p = 0.04R + g$

D_p – maximum size of particle
R – roll radius
g – half of the width of gap between the rolls

- Used to make grits or meal from food grains
- One of the rolls should be spring loaded to avoid any damage to roll surface
- Extensively used for making food grains flakes

Serrated or toothed roll crusher

- Rolls are serrated as per need
- Much more versatile than smooth roll crusher

- Best example – Break and reduction rolls of wheat milling
- Disintegrators are toothed roll crushers in which the corrugated rolls are rotating at different speeds
- Size reduction is by compression, impact and shear and not by compression alone, as in the case of smooth roll crushers
- Can accommodate larger particles than smooth roll crushers

Crushing efficiency

- Ratio of the surface energy created by crushing to the energy absorbed by the solid

16. Explain with a neat sketch about the Attrition mill and also the Double runner disk type attrition mill.

Attrition mill

- The grains are rubbed between grooved flat faces of rotating circular disks.
- Also known as burr or plate mills.
- Axis of roughed disk – horizontal or vertical.
- One plate – stationary & fixed with body of the mill
- Other plate – rotating disk
- Material is fed between plates & reduced by crushing and shear.
- Mills with different patterens of grooves, corrugations on the plates perform a variety of operations.
- Materials are slowly fed,
- Over feeding – lowers the grinder performance

  - heat generation during milling increases.
- Disk – 20 to 137 cm in diameter & operated at 350 to 700 rpm.

Use:

- Making whole grain
- Dehusked grain flour
- Limited use in spices grinding

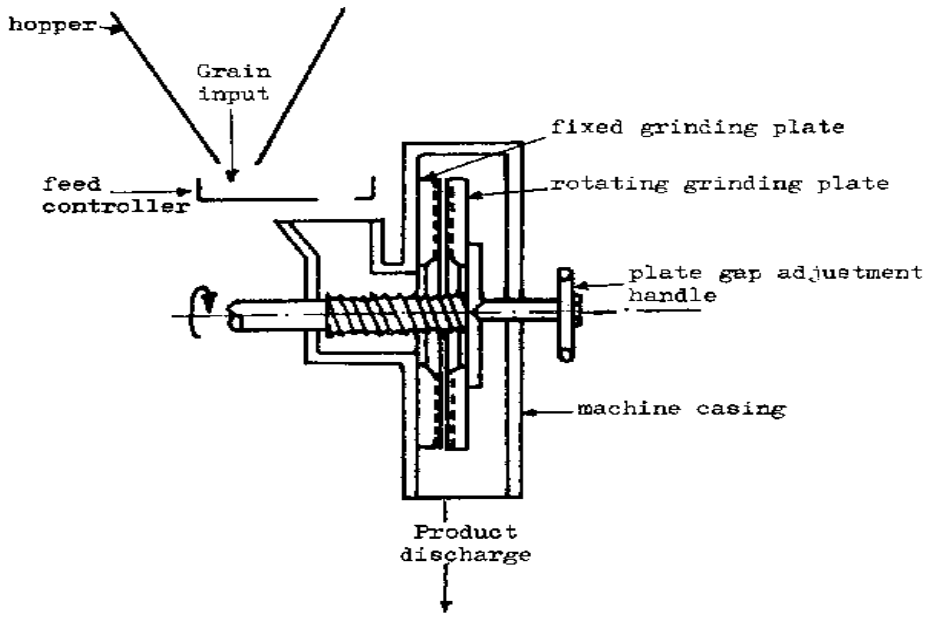

Double runner disk type attrition mill

- Both disks are driven at high speed in opposite directions.
- Feed enters through an opening in the opening hub of one of the disks.
- It passes outward through the narrow gap between disks and discharge from periphery.
- Disks operated between 1200 to 7000 rpm
- Capacity of such mill – large.
- Fineness of grinding controlled by

  - type of plates and gap between them
- Spacing between plates adjustable – spring load arrangement
- - To avoid damage to plates in case of over loading
- - To overcome the damage to plate by foreign material coming along with feed.
- Use:
- Grinding of soft materials.
- Salient features:

  -Lower initial cost
  -Lower power requirements
- Disadvantage:

  - Foreign matter may cause damage / breakage in burr
  - Operation without feed may result in burr wear.

17. a) Describe about the Hammer mills and roller mills in detail with a neat diagram.

Hammer mill

These mills contain :

- a high-speed rotor
- Rotating inside a cylindrical casing

- Shaft – horizontal
- Materials are fed into the mill from the top of the casing
- Broken by rotating hammers and fall out through a screen at bottom.
- Material or feed broken by fixed or swinging hammers – pinned to rotor.
- Hammers rotated between 1500 to 4000 rpm strike and grind the material until it becomes small enough to pass through bottom screen.
- Fineness controlled by screen size.
- Hammers are either rigidly fixed to the shaft or swinging.
- In case of swinging hammer mill:
- - less chances of damage of hammer if some unbreakable solid material comes to milling chamber along with feed.
- There are several designs of striking edge of the hammers.
- It can grind almost anything like:

  - tough fibrous solids
  - steel chips
  - food grains
  - sticky clay
  - hard rock, *etc.*,

- It reduce size by impact.
- Kinetic energy of rotating hammers is used to disintegrate the feed.
- Size reduction achieved by:
- Mostly - impact of hammers (impact force)
- Some amount of shear also take place between feed and screen and other mill parts (shearing force).

Use:

- For various types of size reduction jobs.

Salient features:

- Simplicity and versatility in design and work
- Freedom from damage during empty operation
- Less chances of damage of mill due to foreign objects.

Disadvantage:

- High power requirements

- Capacity and power requirements depends on:

  - nature of feed to be ground.

- Commercial mill energy consumption: between 60 to 240 kg/kWh

Other use:
- For poultry feed grinding and spice grinding
- Grinding of wet sorghum and millets
- For potato, tapioca, banana and similar four making.

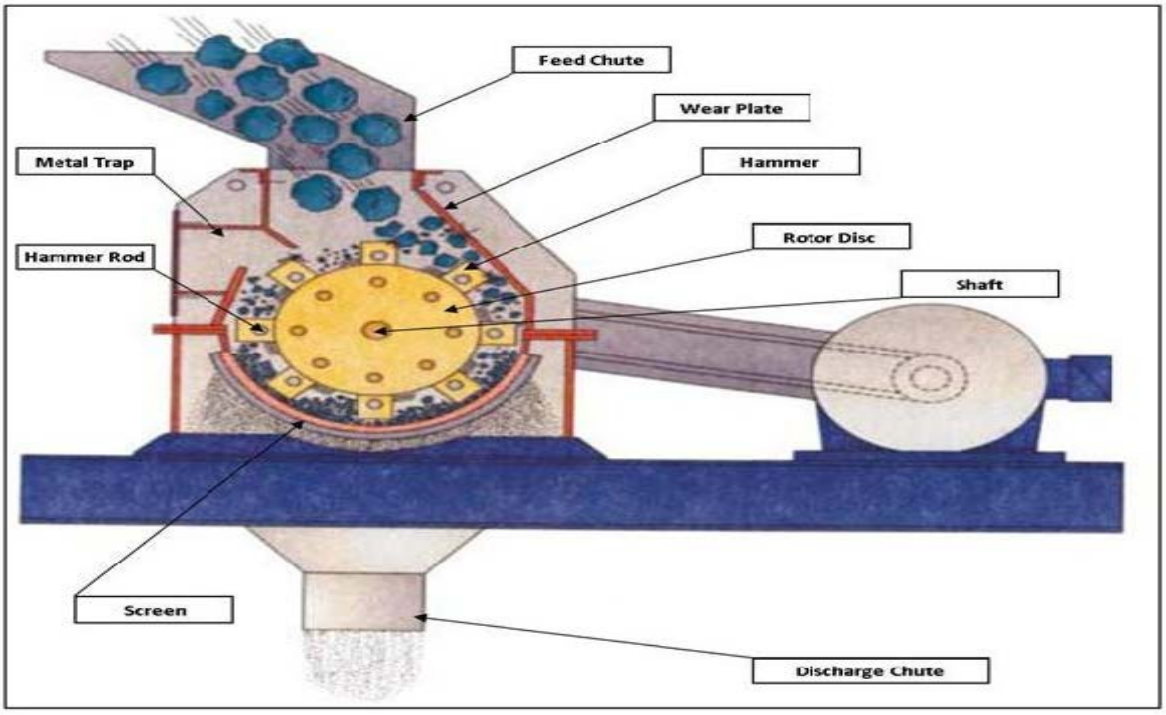

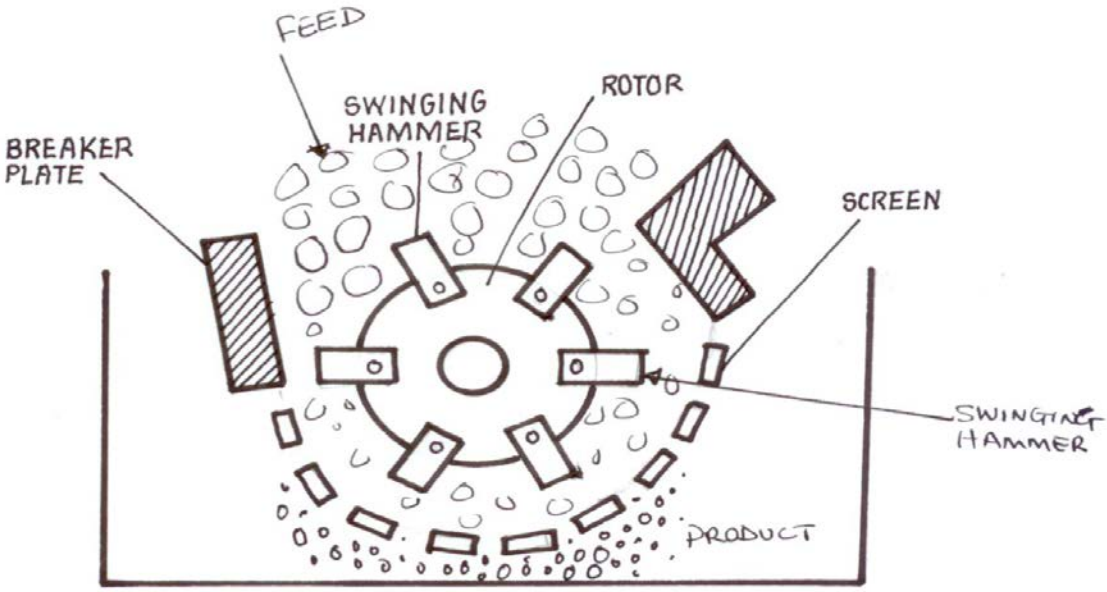

Roller mills

Roller mills are similar to roller crushers, but they have smooth or finely fluted rolls, and rotate at differential speeds. They are used very widely to grind flour. Because of their simple geometry, the maximum size of the particle that can pass between the rolls can be regulated. If the friction coefficient between the rolls and the feed material is known, the largest particle that will be nipped between the rolls can be calculated, knowing

the geometry of the particles.

17. b) Mixing salt and magnesium carbonate
After a mixer mixing 99 kg of salt with 1 kg of magnesium carbonate had been working for some time, ten samples, each weighing 20 g, were taken and analysed for magnesium carbonate. The weights of magnesium carbonate in the samples were: 0.230, 0.172, 0.163, 0.173, 0.210, 0.182, 0.232, 0.220, 0.210, 0.213g. Calculate the standard deviation of the sample compositions from the mean composition.

Fractional compositions of samples, that is the fraction of magnesium carbonate in the sample, are respectively:

0.0115, 0.0086, 0.0082, 0.0087, 0.0105, 0.0091, 0.0116, 0.0110, 0.0105, 0.0107 (x)

Mean composition of samples, overall = 1/100 = 0.01 ($\bar{x}$)

Deviation of samples from mean, (0.0115 - 0.01), (0.0086 - 0.01), etc.

$s^2 = 1/10[(0.0115 - 0.01)^2 + (0.0086 - 0.01)^2 + ...]$
$= 2.250 \times 10^{-6}$

$s = \underline{1.5 \times 10^{-3}}$.

18. Summarise about the particle mixing along with the mixing of widely different quantities, energy input in mixing and also its rates of mixing.

If particles are to be mixed, starting out from segregated groups and ending up with the **components randomly distributed**, the expected variances (s^2) of the sample compositions from the mean sample composition can be calculated.

Consider a two-component mixture consisting of a fraction p of component P and a fraction q of component Q. In the unmixed state virtually all small samples taken will consist either of pure P or of pure Q. From the overall proportions, if a large number of samples are taken, it would be expected that a proportion p of the samples would contain pure component P. That is their deviation from the mean composition would be (1 - p), as the sample containing pure P has a fractional composition 1 of component P. Similarly, a proportion q of the samples would contain pure Q, that is, a fractional composition 0 in terms of component P and a deviation (0 - p) from the mean. Summing these in terms of fractional composition of component P and remembering that $p + q = 1$.

$s_o^2 = 1/n\ [pn(1 - p)^2 + (1 - p)n(0 - p)^2]$ (for n samples)
$= p(1 - p)$ (12.2)

When the mixture has been **thoroughly dispersed**, it is assumed that the components are distributed through the volume in accordance with their overall proportions. The probability that any particle picked at random will be component Q will be q, and (1 - q) that it is not Q. Extending this to samples containing N particles, it can be shown, using probability theory, that:

$s_r^2 = p(1 - p)/N = s_o^2/N$. (12.3)

This assumes that all the particles are equally sized and that each particle is either pure P or pure Q. For example, this might be the mixing of equal-sized particles of sugar and milk powder. The subscripts o and r have been used to denote the initial and the random values of s^2, and inspection of the formulae, eqn. (12.2) and eqn. (12.3), shows that in the mixing process the value of s^2 has decreased from p(1 - p) to 1/Nth of this value. It has been suggested that intermediate values between s_o^2 and s_r^2 could be used to show the progress of mixing. Suggestions have been made for a **mixing index**, based on this, for example:

$(M) = (s_o^2 - s^2)/(s_o^2 - s_r^2)$ (12.4)

which is so designed that (*M*) goes from 0 to 1 during the course of the mixing process. This measure can be used for mixtures of particles and also for the mixing of heavy pastes.

Mixing of Widely Different Quantities

The mixing of particles varying substantially in size or in density presents special problems, as there will be gravitational forces acting in the mixer which will tend to segregate the particles into size and density ranges. In such a case, initial mixing in a mixer may then be followed by a measure of (slow gravitational) un-mixing and so the time of mixing may be quite critical.

Mixing is simplest when the quantities that are to be mixed are roughly in the same proportions. In cases where very small quantities of one component have to be blended uniformly into much larger quantities of other components, the mixing is best **split into stages**, keeping the proportions not too far different in each stage. For example, if it were required to add a component such that its final proportions in relatively small fractions of the product are 50 parts per million, it would be almost hopeless to attempt to mix this in a single stage. A possible method might be to use four mixing stages, starting with the added component in the first of these at about 30:1. In planning the mixing process it would be wise to take analyses through each stage of mixing, but once mixing times had been established it should only be necessary to make check analyses on the final product.

Rates of Mixing

Once a suitable measure of mixing has been found, it becomes possible to discuss rates of accomplishing mixing. It has been assumed that the mixing index ought to be such that the rate of mixing at any time, under constant working conditions such as in a well-designed mixer working at constant speed, ought to be proportional to the extent of mixing remaining to be done at that time. That is,

$$dM/dt = K[(1 - (M))] \quad (12.5)$$

where (*M*) is the mixing index and *K* is a constant, and on integrating from $t = 0$ to $t = t$ during which (*M*) goes from 0 to (*M*),

$$[(1 - (M))] = e^{-Kt}$$

or $$(M) = 1 - e^{-Kt} \quad (12.6)$$

This exponential relationship, using (*M*) as the mixing index, has been found to apply in many experimental investigations at least over two or three orders of magnitude of (*M*). In such cases, the constant *K* can be related to the mixing machine and to the conditions and it can be used to predict, for example, the **times required to attain a given degree of mixing**.

Energy Input in Mixing

Quite substantial quantities of energy can be consumed in some types of mixing, such as in the mixing of plastic solids. There is no necessary connection between energy consumed and the progress of mixing: to take an extreme example there could be shearing along one plane in a sticky material, then recombining to restore the original arrangement, then repeating which would consume energy but accomplish no mixing at all. However, in well-designed mixers energy input does relate to mixing progress, though the actual relationship has normally to be determined experimentally. In the mixing of flour doughs using high-speed mixers, the energy consumed, or the power input at any particular time, can be used to determine the necessary mixing time. This is a combination of mixing with chemical reaction as flour components oxidize during mixing in air which leads to increasing resistance to shearing and so to increased power being required to operate the mixer.

19. **Mixing of yeast into dough**

For a particular bakery operation, it was desired to mix dough in 95 kg batches and then at a later time to

blend in 5 kg of yeast. For product uniformity it is important that the yeast be well distributed and so an experiment was set up to follow the course of the mixing. It was desired to calculate the mixing index after 5 and 10 min mixing.
Sample yeast compositions, expressed as the percentage of yeast in 100 g samples were found to be:
After 5 min

(%)	0.0	16.5	3.2	2.2	12.6	9.6	0.2	4.6	0.5	8.5
Fractional	0.0	0.165	0.032.....							

After 10 min

(%)	3.4	8.3	7.2	6.0	4.3	5.2	6.7	2.6	4.3	2.0
Fractional	0.034	0.083								

Using the formula $1/n[\Sigma(x_1^{2)]} - (\bar{x})^2$

Calculating $s_5^2 = 3.0 \times 10^{-3}$
$s_{10}^2 = 3.8 \times 10^{-4}$

The value of $s_o^2 = 0.05 \times 0.95 = 4.8 \times 10^{-2}$

and $s_r^2 \approx 0$ as the number of "particles" in a sample is very large,

$(M)_5 = (4.8 - 0.3)/(4.8 - 0)$
$= \underline{0.93}$
$(M)_{10} = (4.8 - 0.04)/4.8 - 0)$
$= \underline{0.99}$.

20. **Blending starch and dried vegetables for a soup mix**
In a batch mixer, blending starch and dried-powdered vegetables for a soup mixture, the initial proportions of dried vegetable to starch were 40:60. If the variance of the sample compositions measured in terms of fractional compositions of starch was found to be 0.0823 after 300 s of mixing, for how much longer should the mixing continue to reach the specified maximum sample composition variance for a 24 particle sample of 0.02?

Assume that the starch and the vegetable particles are of approximately the same physical size.

Then taking the fractional content of dried vegetables to be $p = 0.4$,

$(1 - p) = (1 - 0.4) = 0.6$
$s_o^2 = 0.4 \times 0.6 = 0.24$
$s_r^2 = s_0^2/N = 0.24/24$ from eqn. (12.3)
$= 0.01$
Substituting in eqn. (12.4) we have:

$(M) = (s_o^2 - s^2)/(s_o^2 - s_r^2)$
$= (0.24 - 0.0823)/(0.24 - 0.01)$
$= 0.685$

Substituting in eqn.12.6

$e^{-300K} = 1 - 0.685 = 0.315$
$300K = 1.155,$
$K = 3.85 \times 10^{-3}$
For $s^2 = 0.02,$
$(M) = (0.24 - 0.02)/(0.24 - 0.01)$
$= 0.957$
$0.957 = 1 - e^{-0.00385t}$
$- 0.043 = - e^{-0.00385t}$
$3.147 = 0.00385t$

$t = 817$s, say 820 s,

<u>the additional mixing time would be 820s - 300 s = 520 s</u>.

21. a.) Explain about liquid mixing in detail.

Food liquid mixtures could in theory be sampled and analysed in the same way as solid mixtures but little investigational work has been published on this, or on the mixing performance of fluid mixers. Most of the information that is available concerns the power requirements for the most commonly used liquid mixer - some form of **paddle or propeller stirrer**. In these mixers, the fluids to be mixed are placed in containers and the stirrer is rotated. Measurements have been made in terms of dimensionless ratios involving all of the physical factors that influence **power consumption**. The results have been correlated in an equation of the form

$$(Po) = K(Re)^n(Fr)^m \qquad (12.7)$$

where (Re) = ($D^2N\rho/\mu$), (Po) = ($P/D^5N^3\rho$) and this is called the **Power number** (relating drag forces to inertial forces), (Fr) = (DN^2/g) and this is called the **Froude number** (relating inertial forces to those of gravity); D is the diameter of the propeller, N is the rotational frequency of the propeller (rev/sec), ρ is the density of the liquid, μ is the viscosity of the liquid and P is the power consumed by the propeller.

Notice that the Reynolds number in this instance, uses the product DN for the velocity, which differs by a factor of p from the actual velocity at the tip of the propeller.

The Froude number correlates the effects of gravitational forces and it only becomes significant when the propeller disturbs the liquid surface. Below Reynolds numbers of about 300, the Froude number is found to have little or no effect, so that eqn. (12.7) becomes:

$$(Po) = K(Re)^n \qquad (12.8)$$

Unfortunately, general formulae have not been obtained, so that the results are confined to the particular experimental propeller configurations that were used. If experimental curves are available, then they can be used to give values for n and K in eqn. (12.8) and the equation then used to predict power consumption. For example, for a propeller, with a pitch equal to the diameter, Rushton gives n = -1 and K = 41.

In cases in which experimental results are not already available, the best approach to the prediction of power consumption in propeller mixers is to use physical models, measure the factors, and then use eqn. (12.7) or eqn. (12.8) for scaling up the experimental results.

b) **EXAMPLE 12.6. Blending vitamin concentrate into molasses**

Vitamin concentrate is being blended into molasses and it has been found that satisfactory mixing rates can be obtained in a small tank 0.67 m diameter, height 0.75 m,with a propeller 0.33 m diameter rotating at 450 rev min^{-1}. If a large-scale plant is to be designed which will require a tank 2 m diameter, what will be suitable values to choose for tank depth, propeller diameter and rotational speed, if it is desired to preserve the same mixing conditions as in the smaller plant? What would be the power requirement for the motor driving the propeller? Assume that the viscosity of molasses is 6.6 N s m^{-2} and its density is 1520 kg m^{-3}.

Use the subscripts S for the small tank and L for the larger one. To preserve geometric similarity the dimensional ratios should be the same in the large tank as in the small.

Given that the full-scale tank is three times larger than the model,

$$D_L = 3D_S.$$

depth of large tank = $H_L = 3H_S$ = 3 x 0.75 = 2.25 m

and

propeller diameter in the large tank = $D_L = 3D_S$ = 3 x 0.33 = 1 m .

For dynamic similarity, $(Re)_L = (Re)_S$

$$(D^2N\rho/\mu)_L = (D^2N\rho/\mu)_S$$

$D_L^2 N_L = D_S^2 N_S$

$N_L = (1/3)^2 \times 450$
$= 50$ rev min^{-1}
$= 0.83$ rev sec^{-1}.
= speed of propeller in the large tank.

For the large tank (Re) = $(D_L^2 N_L \rho/\mu)$

so (Re) = $(1^2 \times 0.83 \times 1520)/6.6$
= 191

Eqn. (12.8) is applicable, and assuming that K = 41 and n = -1, we have

$(Po) = 41(Re)^{-1} = (P/D^5 N^3 \rho)$

$P = (41 \times 1^5 \times (0.83)^3 \times 1520)/(191)$
$= 186$ J s^{-1}

And since 1 horsepower = 746 J s^{-1}
Required motor = 186/746, say 1/4 horsepower.

22.Write in detail about the mixing equipment with a neat diagram of all.

Many forms of mixers have been produced from time to time but over the years a considerable degree of standardization of mixing equipment has been reached in different branches of the food industry. Possibly the easiest way in which to classify mixers is to divide them according to whether they mix liquids, dry powders, or thick pastes.

Liquid Mixers

For the deliberate mixing of liquids, the propeller mixer is probably the most common and the most satisfactory. In using propeller mixers, it is important to avoid regular flow patterns such as an even swirl round a cylindrical tank, which may accomplish very little mixing. To break up these streamline patterns, baffles are often fitted, or the propeller may be mounted asymmetrically.

Various baffles can be used and the placing of these can make very considerable differences to the mixing performances. It is tempting to relate the amount of power consumed by a mixer to the amount of mixing produced, but there is no necessary connection and very inefficient mixers can consume large amounts of power.

Powder and Particle Mixers

The essential feature in these mixers is to displace parts of the mixture with respect to other parts. The ribbon blender, for example, shown in Fig. **12.2(a)** consists of a trough in which rotates a shaft with two open helical screws attached to it, one screw being right-handed and the other left-handed. As the shaft rotates sections of the powder move in opposite directions and so particles are vigorously displaced relative to each other.

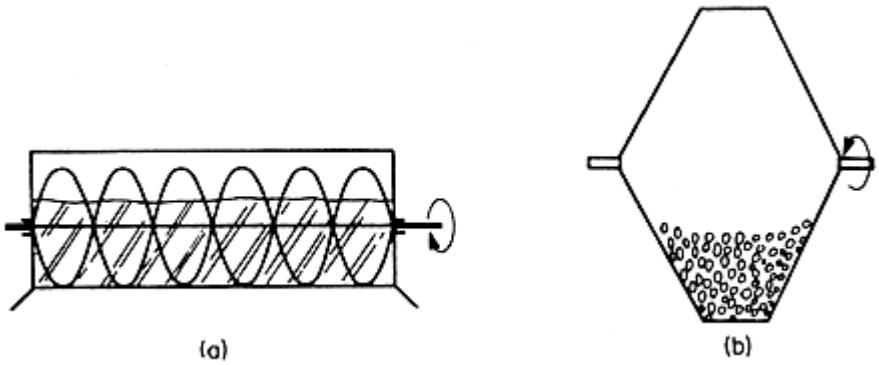

Figure 12.2 Mixers (a) ribbon blender, (b) double-cone mixer

A commonly used blender for powders is the double-cone blender in which two cones are mounted with their open ends fastened together and they are rotated about an axis through their common base. This mixer is shown in Fig. 12.2(b).

Dough and Paste Mixers

Dough and pastes are mixed in machines that have, of necessity, to be heavy and powerful. Because of the large power requirements, it is particularly desirable that these machines mix with reasonable efficiency, as the power is dissipated in the form of heat, which may cause substantial heating of the product. Such machines may require jacketing of the mixer to remove as much heat as possible with cooling water.

Perhaps the most commonly used mixer for these very heavy materials is the kneader which employs two contra-rotating arms of special shape, which fold and shear the material across a cusp, or division, in the bottom of the mixer. The arms are of so-called sigmoid shape as indicated in **Fig. 12.3**.

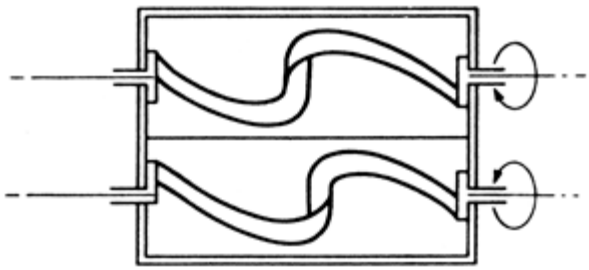

Figure 12.3 Kneader

They rotate at differential speeds, often in the ratio of nearly 3:2. Developments of this machine include types with multiple sigmoid blades along extended troughs, in which the blades are given a forward twist and the material makes its way continuously through the machine.

Another type of machine employs very heavy contra-rotating paddles, whilst a modern continuous mixer consists of an interrupted screw which oscillates with both rotary and reciprocating motion between pegs in an enclosing cylinder. The important principle in these machines is that the material has to be divided and folded and also displaced, so that fresh surfaces recombine as often as possible.

23.a) Briefly explain about the preparation of emulsions

The essential feature of an emulsion is the small size of the disperse phase droplets. This can be achieved by imposing very high shearing stresses upon the liquid that is to be dispersed and the shearing forces break the material into the multitude of fine particles.

Shearing is, generally, attained by passing the liquid through a high pressure pump, to bring it up to pressures of the order of 7 x 10^3kPa, and then discharging this pressure suddenly by expansion of the liquid through a small gap or nozzle; the equipment is often called a homogenizer. In passing through the nozzle, very large shear forces are exerted on the liquid, disrupting cohesion and dispersing it into the very small particles.

Centrifugal forces may also be used to obtain the shearing action. Discs spinning at high velocities give rise to high shearing forces in liquids flowing over them. Flow between contra-rotating discs, which may have pegs on the disc faces, can be used to produce emulsions. Designs in which small clearances are used between a stationary disc and a high speed flat or conical rotating disc are called colloid mills. Another source of energy for shearing is from ultrasonic vibrations induced in the liquid.

Existing emulsions can be given increased stability by decreasing the size of the droplets either by impact or shearing the emulsion still further; the process is called **homogenization**. Homogenizing results in smaller and more uniform droplet sizes and a practical example is the homogenizing of milk.

Examples of emulsions met with frequently in the food industry are - milk (fat dispersed in water), butter (water dispersed in fat), mayonnaise (oil in water) and ice cream (fat in water which is then frozen).

Milk is an emulsion of fat in water, which is not stable indefinitely as it separates on standing, into skim milk and cream. This is caused by the density differences between the fat and the water, the fat globules rising as predicted by Stokes' Law and coalescing at the surface to form a layer of cream. After homogenizing, this separation does not occur as the globules are much reduced in size. Homogenizing is also used with ice cream mixes, which are dispersions of fat and air in sugar solutions, and in the manufacture of margarine.

The same surface effects that govern liquid emulsions also apply to dispersions of solids in liquids and of liquids or solids in gases. Colloidal solutions of solids can be produced if the particle size is of the necessary order, below about 0.1 μm, and again stability depends upon the surface properties of the materials. Aerosols, for example, fine mists in the atmosphere, can also be quite stable.

24. i)Describe in detail about Gas/Liquid Equilibria

Molecules of the components in a liquid mixture or solution have a tendency to escape from the liquid surface into the gas above the solution. The escaping tendency sets up a pressure above the surface of the liquid owing to the resultant concentration of the escaped molecules. This pressure is called the vapour pressure of the liquid.

The magnitude of the vapour pressure depends upon the liquid composition and upon the temperature. For pure liquids, vapour-pressure relationships have been tabulated and may be found in reference works such as Perry (1997) or the International Critical Tables. For a solution or a mixture, the various components in the liquid each exert their own partial vapour pressures.

When the liquid contains various components it has been found that, in many cases, the **partial vapour pressure** of any component is proportional to the mole fraction of that component in the liquid. That is,

$p_A = H_A x_A$

wherep_A is the partial vapour pressure of component A, H_A is a constant for component A at a given

temperature and x_A is the mole fraction of component *A* in the liquid.

This relationship is approximately true for most systems and it is known as **Henry's Law**. The coefficient of proportionality H_A is known as the Henry's Law constant for component *A*, and has units of kPa (mole fraction)$^{-1}$. In reverse, Henry's Law can be used to predict the **solubility of a gas in a liquid**. If a gas exerts a given partial pressure above a liquid, then it will dissolve in the liquid until Henry's Law is satisfied and the mole fraction of the dissolved gas in the liquid is equal to the value appropriate to the partial pressure of that gas above the liquid. The reverse prediction can be useful for predicting the gas solubility in equilibrium below imposed gaseous atmospheres of various compositions and pressures.

24. ii) Solubility of carbon dioxide in water
Given that the Henry's Law constant for carbon dioxide in water at 25°C is 1.6 x 10^5kPa (mole fraction)$^{-1}$, calculate the percentage solubility by weight of carbon dioxide in water under these conditions and at a partial pressure of carbon dioxide of 200 kPa above the water.

From Henry's Law $p = Hx$

$$200 = 1.6 \times 10^5 x$$

$$x = 0.00125$$

$$= \frac{(w_{CO2})}{44} / \left(\frac{w_{H20}}{18} + \frac{w_{CO2}}{44} \right)$$

But since $(w_{H20}/18) \gg (w_{CO2}/44)$

$$1.25 \times 10^{-3} \approx (w_{CO2}/44) / (w_{H20}/18)$$

and so $(w_{CO2}/ w_{H20}) \approx 1.25 \times 10^{-3} / (44/18)$

$$= 3.1 \times 10^{-3}$$

$$= 3.1 \times 10^{-1} \%$$

$$= \underline{0.31\%}$$

25.i) Describe in detail about the Solid/Liquid Equilibria with example.

Liquids have a capacity to dissolve solids up to an extent, which is determined by the **solubility** of the particular solid material in that liquid.

Solubility is a function of **temperature** and, in most cases, solubility increases with rising temperature. A solubility curve can be drawn to show this relationship, based on the equilibrium concentration in solution measured in convenient units, for example gkg^{-1}, as a function of temperature. Such a curve is illustrated in **Fig. 9.1** for sodium nitrite in water.

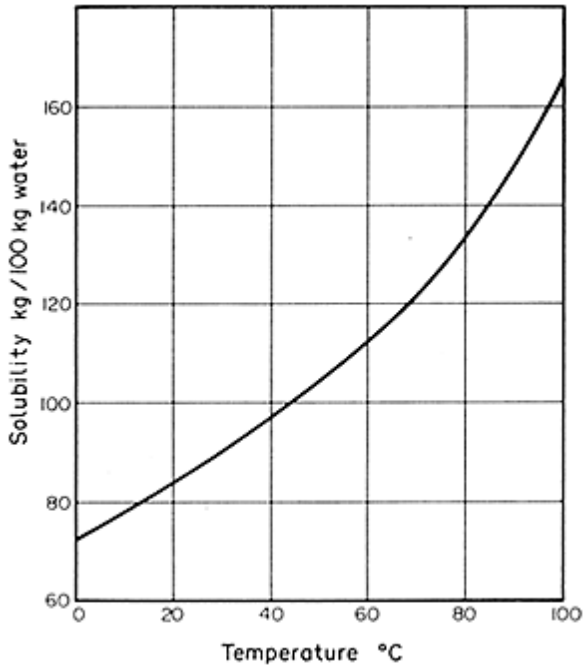

Figure 9.1 Solubility of sodium nitrite in water

There are some relatively rare systems in which solubility decreases with temperature, and they provide what is termed a reversed solubility curve. The equilibrium solution, which is ultimately reached between solute and solvent, is called a **saturated solution**, implying that no further solute can be taken into solution at that particular temperature.

An unsaturated solution plus solid solute is not in equilibrium, as the solvent can dissolve more of the solid. When a saturated solution is heated, if it has a normal solubility curve the solution then has a capacity to take up further solute material, and so it becomes unsaturated. Conversely, when a saturated solution is cooled it becomes **super saturated**, and at equilibrium that solute which is in excess of the solubility level at the particular temperature will come out of solution, normally as crystals. However, this may not occur quickly and in the interim the solution is spoken of as super saturated and it is said to be in a metastable state.

ii) Explain in detail about the rate of gas absorption

The rates of mass transfer in gas absorption are controlled by the extent of the departure of the system from the equilibrium concentrations and by the resistance offered to the mass transfer by the streams of liquid and gas. Thus, we have the familiar expression:

rate of absorption = driving force/resistance,

The driving force is the extent of the difference between the actual concentrations and the equilibrium concentrations. This is represented in terms of concentration differences.

For the resistance, the situation is complicated, but for practical purposes it is adequate to consider the whole of the resistance to be concentrated at the interface between the two streams. At the interface, two films are postulated, one in the liquid and one in the gas. The two-film theory of **Lewis and Whitman** defines these resistances separately, a gas film resistance and a liquid film resistance. They are treated very similarly to surface heat coefficients and the resistances of the two films can be combined in an overall resistance similar to an overall heat transfer coefficient.

The driving forces through each of the films are considered to be the concentration differences between the material in the bulk liquid or gas and the material in the liquid or gas at the interface. In practice, it is seldom possible to measure interfacial conditions and overall coefficients are used giving the equation

$dw/dt = K_l A\ (x^* - x) = K_g A(y - y^*)$

where dw/dt is the quantity of gas passing across the interface in unit time, K_1 is the overall liquid mass-transfer coefficient, K_g is the overall gas mass-transfer coefficient, A is the interfacial area and x, y are the concentrations of the gas being transferred, in the liquid and gas streams respectively. The quantities of x^* and y^* are introduced into the equation because it is usual to express concentrations in the liquid and in the gas in different units. With these, x^* represents the concentration in the liquid which would be in equilibrium with a concentration y in the gas and y^* the concentration in the gas stream which would be in equilibrium with a concentration x in the liquid.

26.) Explain with a neat sketch about the operating conditions of contact equilibrium process with derivation.

In a series of **contact stages**, in which the components counter flow from one stage to another, mass balances can be written around any stage, or any number of stages. This enables operating equations to be set down to connect the flow rates and the compositions of the streams. Consider the generalized system shown in **Fig. 9.2**, in which there is a stage contact process operating with a number of stages and two contacting streams. By convention, the mass flow of the light stream is denoted by V and the flow of the heavy stream by L.as shown in Figure 9.2 (left hand side)

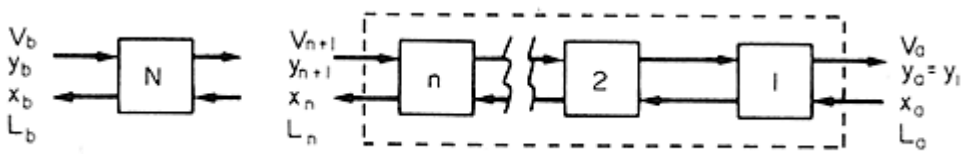

Figure 9.2 Contact equilibrium stages

Taking a **mass balance** over the first n stages as shown in Figure 9.2 (right hand side) we can write, for the total flow, mass entering must equal mass leaving, so:

$$V_{n+1} + L_a = V_a + L_n$$

and for the component being exchanged:

$$V_{n+1}\, y_{n+1} + L_a x_a = V_a y_a + L_n x_n$$

where$V$ is the mass flow rate of the light stream, L is the flow rate of the heavy stream, y is the concentration of the component being exchanged in the light stream and x is the concentration of the component being exchanged in the heavy stream. In the case of the subscripts, n denotes conditions at equilibrium in the nth stage, n + 1 denotes conditions at equilibrium in the (n + 1)th stage and *a* denotes the conditions of the streams entering and leaving stage 1, one being raw material and one product from that stage

Eliminating V_{n+1} between these equations, we have:

$$V_{n+1} = L_n - L_a + V_a$$

and so,

$$y_{n+1}(L_n - L_a + V_a) = V_a y_a + L_n x_n - L_a x_a$$

$$y_{n+1} = x_n\, [L_n / (L_n - L_a + V_a)] + [(V_a y_a - L_a x_a) / (L_n - L_a + V_a)]$$

This is an important equation as it expresses the concentration in one stream in the (n + 1)th stage in terms of the concentration in the other streams in the nth stage. In many practical cases in which equal quantities, or equal molar quantities, of the carrying streams move from one stage to another, that is where the flow rates are the same in all contact stages, then for:

lighter phase $L_{n+1} = L_n = \ldots \quad L_a = L$
heavier phase $V_{n+1} = \ldots = V_a. = V$

A simplified equation can be written for such cases:

$$y_{n+1} = x_n L / V + y_a - x_a L / V$$

27. i) Single stage steam stripping, of taints from cream

A continuous deodorizing system, involving a single stage steam stripping operation, is under consideration for the removal of a taint from cream. If the taint component is present in the cream to the extent of 8 parts per million (ppm) and if steam is to be passed through the contact stage in the proportions of 0.75 kg steam to every 1 kg cream, calculate the concentration of the taint in the leaving cream. The equilibrium concentration distribution of the taint has been found experimentally to be in the ratio of 1 in the cream to 10 in the steam and it is assumed that equilibrium is reached in each stage.

Call the concentration of the taint in the cream x, and in the steam y, both as mass fractions,

From the condition that, at equilibrium, the concentration of the taint in the steam is 10 times that in the cream:

$$10x = y$$

and in particular, $10x_1 = y_1$

Now, y_1 the concentration of taint in the steam leaving the stage is also the concentration in the output steam

$$y_1 = y_a = 10x_1$$

The incoming steam concentration = $y_2 = 0$ as there is no taint in the entering steam.

The taint concentration in the entering cream is $x_a = 8$ ppm.

These are shown diagrammatically in **Fig. 9.3**.
Basis is 1 kg of cream

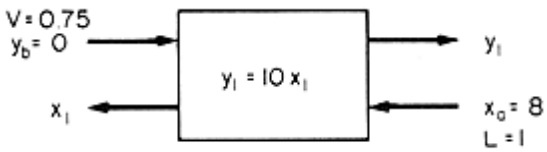

Figure 9.3 Flows into and out from a stage

The problem is to determine x_1 the concentration of taint in the product cream.

The mass ratio of stream flows is 1 of cream to 0.75 of steam and if no steam is condensed this ratio will be preserved through the stage.

1/0.75 = 1.33 is the ratio of cream flow rate to steam flow rate = L/V.

Applying eqn. (9.6) to the one stage $n = 1$,

$$y_2 = x_1 L/V + y_a - x_a L/V$$
$$y_2 = 0 = x_1 1.33 + 10x_1 - 8 \times 1.33$$

$$x_1 = 10.64/11.33$$

= 0.94 ppm

which is the concentration of the taint in the leaving cream, having been reduced from 8 ppm.

$s = 1.5 \times 10^{-3}$.

27. ii) Summarise about gas absorption equipment.

Gas absorption equipment is designed to achieve the greatest practicable interfacial area between the gas and the liquid streams, so that liquid sprays and gas-bubbling devices are often employed. In many cases, a vertical array of trays is so arranged that the liquid descends over a series of perforated trays, or flows down over ceramic packing that fills a tower.

For the hydrogenation of oils, absorption is followed by reaction of the hydrogen with the oil, and a nickel catalyst is used to speed up the reactions. Also, pressure is applied to increase gas concentrations and therefore speed up the reaction rates. Practical problems are concerned with arranging distribution of the catalyst, as well as of oil and hydrogen. Some designs spray oil and catalyst into hydrogen, others bubble hydrogen through a continuous oil phase in which catalyst particles are suspended.

For the stripping of volatile flavours and taints in deodorizing equipment, the steam phase is in general the continuous one and the liquid is sprayed into this and then separated. In one design of cream deodorizing plant, cream is sprayed into an atmosphere of steam and the two streams then pass on to the next stages, or the steam may be condensed and fresh steam used in the next stage

28. Summarise about the flow through packed tower and also list out and explain about its properties.

A packed tower is a simply a tube or pipe , which is filled with some sort of –packing‖.

The packing typically consists of particles around an inch in diameter.

Liquid is sprayed or poured over the packing material contained between supported trays.

In commercial packed towers, the usual choice are particles, with one of three different shapes,

raschig ring, berl

saddle, pall ring,

In **packed tower** or **wet-film scrubbers**, liquid is sprayed or poured over packing material contained between support trays. A liquid film coats the packing through which the exhaust gas stream is forced. Pollutants are collected as they pass through the packing, contacting the liquid film. Therefore, both gas and liquid phases provide energy for the gas-liquid contact . A wet-film scrubber uses packing to provide a large contact area between the gas and liquid phases, turbulent mixing of the phases, and sufficient residence time for the exhaust gas to contact the liquid. These conditions are ideal for gas absorption. Large contact area and good mixing are also good for particle collection; however, once collected, the particles tend to accumulate and plug the packing bed.The exhaust gas is forced to make many changes in direction as it winds through the openings of the packed material. Large particles unable to follow the streamlines, hit the packing and are collected in the liquid. As this liquid drains through the packing bed, the collected particles may accumulate, thus plugging the void spaces in the packed bed. Therefore, wet-film towers are *not* used when particle removal is the only concern. Many other scrubber designs achieve better particle removal for the same power input (operating

costs).

Properties:

GasCollection:
For gas absorption, packed towers are the most commonly used devices. The wet film covering the packing enhances gas absorption several ways by providing:
• A large surface area for gas-liquidcontact
• Turbulent contact (good mixing) between the twophases
• Long residence time and repetitivecontact
Because of these features, packed towers are capable of achieving high removal efficiencies for many different gaseous pollutants. Numerous operating variables affect absorption efficiency. Of primary importance is the solubility of the gaseous pollutants. Pollutants that are readily soluble in the scrubbing liquid can be easily removed under a variety of operating conditions. Some other important operating variables are discussed below.
Gas velocity – The rate of exhaust gas from the process determines the scrubber size to be used. The scrubber should be designed so that the gas velocity through it will promote good mixing between the gas and liquid phases. However, the velocity should not be too fast to cause flooding.
Liquid-injection rate - Generally, removal efficiency is increased by an increase in the liquid-injection rate to the vessel. The amount of liquid that can be injected is limited by the dimensions of the scrubber. Increasing liquid-injection rates will also increase the operating costs. The optimum amount of liquid injected is based on the exhaust gas flow rate.
Packing size - Smaller packing sizes offer a larger surface area, thus enhancing absorption. However, smaller packing fits more tightly, which decreases the open area between packing, thus increasing the pressure drop across the packing bed.
Packing height - As packing height increases, total surface area and residence time increases, enhancing absorption. However, more packing necessitates a larger absorption system, which increases capital cost.

29. Explain in detail about the flow in a packed tower. (**Countercurrent Flow: Cocurrent Flowand Crossflow Arrangement).**

Countercurrent Flow:

The most common flow configuration for packed towers is **countercurrent flow**. Figure shows a packed tower with this arrangement. The exhaust stream being treated enters the bottom of the tower and flows upward over the packing material. Liquid is introduced at the top of the packing by sprays or weirs, and it flows downward over the packing material. As the exhaust stream moves up through the packing, it is forced to make many winding changes in direction, resulting in intimate mixing of both the exhaust gas and liquid streams. This countercurrent-flow arrangement results in the highest *theoretically* achievable efficiency. The most dilute gas is contacted with the purest absorbing liquor, providing a maximized concentration difference (driving force) for the entire length of the column. In the other two flow arrangements, the scrubbing liquid could theoretically reach the same concentration as the flue gas (since they are moving in similar directions) and therefore absorption would stop.

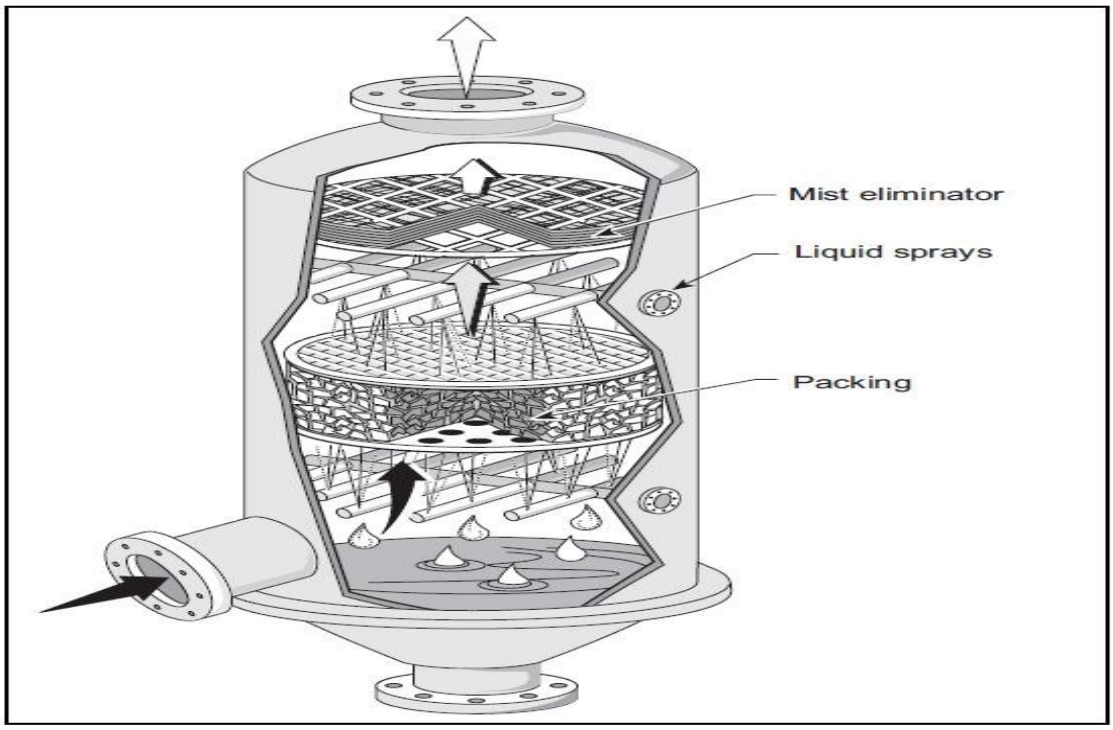

Figure 5-1. Countercurrent-flow packed tower

The countercurrent-flow packed tower does not operate effectively if there are large variations in the liquid or gas flow rates. If either the liquid-injection rate or the gas flow rate through the packing bed is too high, a condition called flooding may occur.

Flooding can be reduced by reducing the gas velocity through the bed or by reducing the liquid-injection rate.

COCURRENT FLOW :

In another flow arrangement used with packed towers, **cocurrent flow,** both the exhaust gas and liquid phases enter at the top of the absorber and move downward over the packing material.

This allows the absorber to operate at higher liquid and gas flow rates since flooding is not a problem. The pressure drop is lower than with countercurrent flow since both streams move in the same direction.

The major disadvantage is that removal efficiency is very limited due to the decreasing driving force (concentration differential) as the streams travel down through the column. This limits the areas of application for cocurrent absorbers. They are used almost exclusively in situations where limited equipment space is available, since the tower diameter is smaller than that for countercurrent or plate towers for equivalentflowrates.

Cocurrent flow is illustrated in Figure

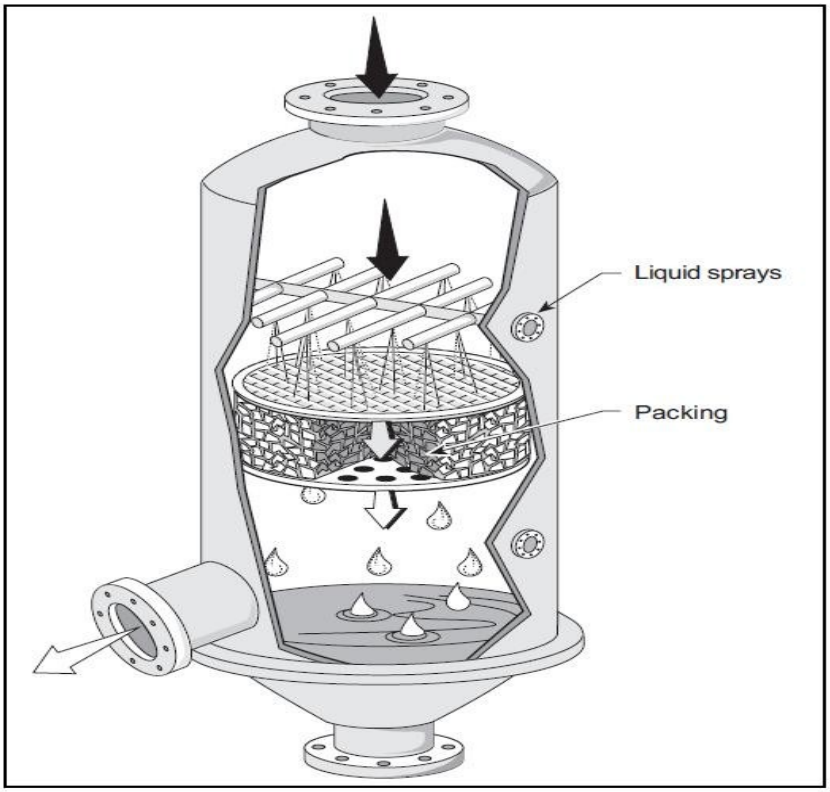

Figure 5-2. Cocurrent-flow packed tower

CROSSFLOW ARRANGEMENT:

In packed towers using the **crossflow arrangement, the exhaust gas stream moves** horizontally through the packed bed. The bed is irrigated by the scrubbing liquid flowing down through the packing material.

The liquid and exhaust gas flow in directions perpendicular to each other. A typical crossflow packed tower is shown in Figure. Inlet sprays aimed at the face of the bed may also be included.

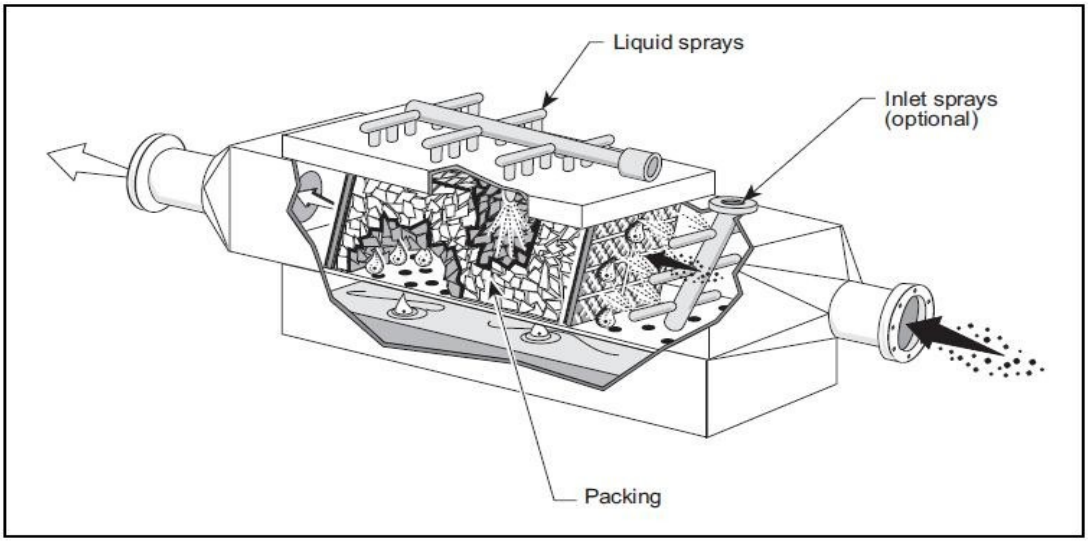

Figure 5-3. Crossflow packed tower

Crossflow absorbers can be designed to be smaller and have a lower pressure drop than any

other packed or plate tower for the same application (i.e. removal efficiency and flow rates). This also results in a liquid savings by enabling the crossflow packed tower to use less liquid in the rear sprays. This practice is carried one step further by actually constructing the tower into sections as shown in Figure.
The front section can be equipped with water sprays and used for particulate matter removal. In the second section, sprays may contain a reagent in the scrubbing liquor for gas removal. The last section can be left dry to act as an entrainment separator.
Crossflow packed towers do require complex design procedures since concentration gradients exist in two directions in the liquid: from top to bottom and from front to rear

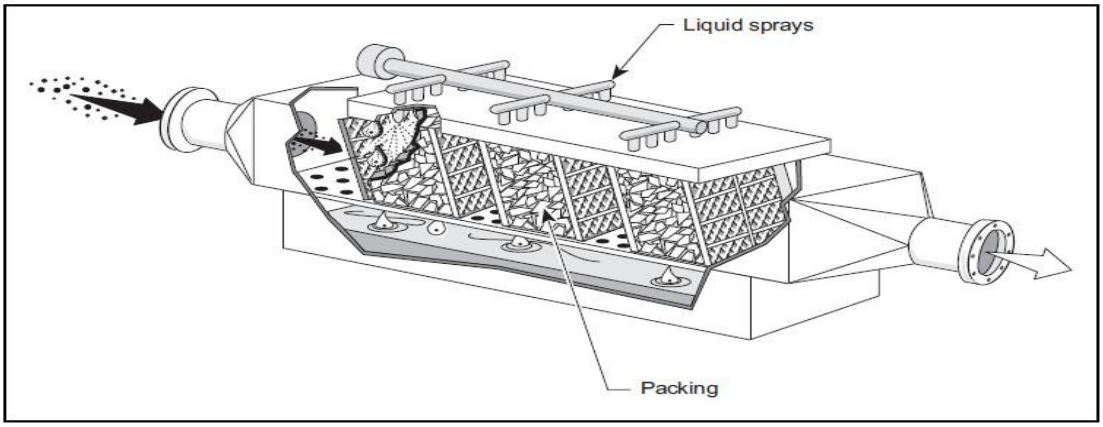

Figure 5-4. Three-bed crossflow packed tower

Another crossflow packed tower is the **fiber-bed scrubber. The fiber-bed scrubber has** packed beds that are made with fibrous material such as fiberglass or plastic .
Liquid is sprayed onto the fiber beds to provide a wetted surface for pollutant removal and to wash away any collected material.

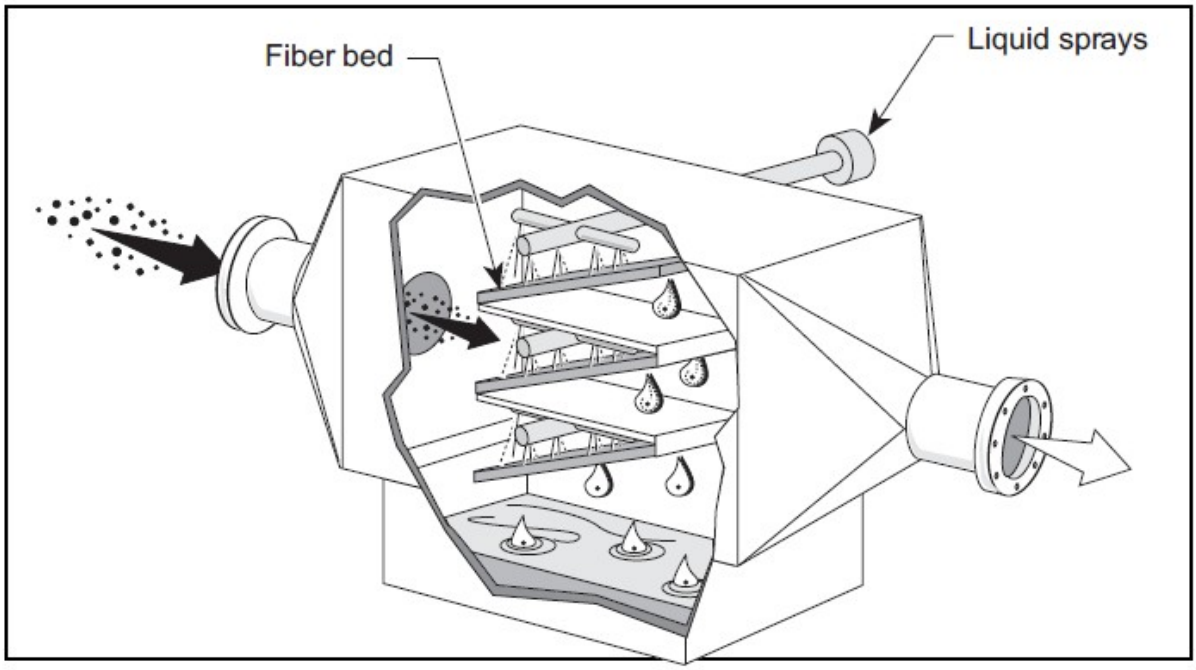

Figure 5-5. Fiber-bed scrubber

30. a) Write in detial about the rate of extraction.

The solution process can be considered in terms of the usual rate equation

rate of solution = driving force/resistance.

In this case, the driving force is the difference between the concentration of the component being transferred, the solute, at the solid interface and in the bulk of the solvent stream. For liquid-liquid extraction, a double film must be considered, at the interface and in the bulk of the other stream.

For solution from a solid component, the equation can be written

$$dw/dt = K_l A(y_s - y) \qquad (9.8)$$

where dw/dt is the rate of solution, K_l is the mass-transfer coefficient, A is the interfacial area, and y_s and y, are the concentrations of the soluble component in the bulk of the liquid and at the interface. It is usually assumed that a saturated solution is formed at the interface and y_s is the concentration of a saturated solution at the temperature of the system.

Examination of eqn. (9.8) shows the effects of some of the factors, which can be used to speed up rates of solution. Fine divisions of the solid component increases the interfacial area A. Good mixing ensures that the local concentration is equal to the mean bulk concentration. In other words, it means that there are no local higher concentrations arising from bad stirring increasing the value of y and so cutting down the rate of solution. An increase in the temperature of the system will, in general, increase rates of solution by not only increasing K_l, which is related to diffusion, but also by increasing the solubility of the solute and so increasing y_s.

In the simple case of extraction from a solid in a contact stage, a mass balance on the solute gives the equation:

$$dw = V dy \qquad (9.9)$$

where V is the quantity of liquid in the liquid stream.

Substituting for dw in eqn. (9.8) we then have:

$$V dy/dt = K_l A(y_s - y)$$

which can then be integrated over time t during which time the concentration goes from an initial value of y_0 to a concentration y, giving

$$\log_e [(y_s - y_0)/ (y_s - y)] = tK_l A/V. \qquad (9.10)$$

Equation (9.10) shows, as might be expected, that the approach to equilibrium is exponential with time. The equation cannot often be applied because of the difficulty of knowing or measuring the interfacial area A. In practice, suitable extraction times are generally arrived at by experimentation under the particular conditions that are anticipated for the plant.

30. b) **Washing of casein curd**

After precipitation and draining procedures, it is found that 100 kg of fresh casein curd has a liquid content of 66% and this liquid contains 4.5% of lactose. The curd is washed three times with 194 kg of fresh water each time. Calculate the residual lactose in the casein after drying. Also calculate the quantity of water that would have to be used in a single wash to attain the same lactose content in the curd as obtained after three washings. Assume perfect washing, and draining of curd to 66% of moisture each time.

100 kg of curd contain 66 kg solution. The 66 kg of solution contain 4.5% that is 3 kg of lactose.

In the first wash (194 + 66) = 260 kg of solution contain 3 kg lactose.
In 66 kg of solution remaining there will be (66/260) x 3 = 0.76 kg of lactose.

After the second wash the lactose remaining will be (66/260) x 0.76 = 0.19kg

After the third wash the lactose remaining will be (66/260) x 0.19 = 0.048 kg

Or, after three washings lactose remaining will be 3 x $(66/260)^3$ = 0.048 kg as above

So, after washing and drying 0.048 kg of lactose will remain with 34 kg dry casein so that

lactose content of the product = 0.048/34.05
= 0.14%
and total wash water = 3 x 194 = 582 kg

To reduce the impurity content to 0.048 kg in one wash would require *x* kg of water, where

$$(3 \times 66)/(x + 66) = 0.048 \text{ kg}$$
$$x = 4060 \text{ kg}$$

and so the total wash water = 4060 kg

Alternatively using eqns. (9.11) and (9.12)

$$x_n = x[1/(1 + y)]^n$$
$$= 3[1/(1 + 194/66)]^3$$
$$= 0.049$$
$$x_n' = x[1/(ny + 1)]$$
$$0.049 = 3[1/(ny + 1)]$$
$$ny = 61.5.$$

Total wash water = n_{yxw} = 61.5 x 66
= 4060 kg.

31. A dryer reduces the moisture content of 100kg of a potato product from 80% to10% moisture. 250kg of steam at 70kPa gauge is used to heat 49,800m3 of air to 80oC, and the air is cooled to 71oC inpassing through the dryer. Calculate the efficiency of the dryer. The specific heat of potato is 3.43kJkg-1oC-1. Assume potato enters at 24oC, which is also the ambient air temperature, and leaves at the same temperature as the exit air

In 100kg of raw material there is 80% moisture, that is 80kg water and 20kg dry material,total
weight of dry product = 20 x (10/9)= 22.2 kg
weight of water= (22.2 -20) = 2.2 kg.
water removed = (80 -2.2) = 77.8 kg.
Heat suppliedto potato product = sensible heat to raise potato product temperature from 24oC to 71oC + latent heat of vaporization.
Now, the latent heat of vaporization corresponding to a saturation temperature of 71oC is 2331 kJkg-1
Heat (minimum) supplied/100kg potato
= 100 x (71 -24) x 3.43 + 77.8 x 2331
= 16 x 103+ 181 x 103
= 1.97x l05kJ.
Heat to evaporate water only= 77.8 x 2331
= 1.81 x l05kJ
The specific heat of air is 1.0 Jkg-1oC-1 and the density of the air 1.06kgm–3
Heat given up by air/100 kg potato
= 1.0 x (80 -71) x 49,800 x 1.06
= 4.75 x l05kJ.
The latent heat of steam at 70 kPagauge(170Pa abs) is 2216 kJkg-1
Heat in steam = 250 x 2216= 5.54 x l05kJ.
Therefore

(a) efficiency based on latent heat of vaporisation only:
= (1.81 x 105)/ (5.54 x 105)

= 33%

(b) efficiency assuming sensible heat remaining in food after drying is unavailable

= (1.97 x 105)/ (5.54 x 105)

= 36%

(c) efficiency based heat input and output, in drying air

η= (T1 -T2)/(T1-Ta)

= (80 –71)/ (80 –24)

= 16%

32.A drum dryer is being used to dry a starch-based breakfast food. The initial moisture content of the food is 75% on a wet basis, the drum surface temperature is 138oC and the food layer outer surface 100oC. The estimated heat transfer coefficient from the drum surface to the drying food is 800Jm-2s-1oC -1. Assume that the thickness of the food on the drum is 0.3mm and the thermal conductivity of the food is 0.55 Jm-1s-1oC -1. If the drum, 1m diameter and 1m in length, is rotating at 2rev/min and the food occupies three-quarters of the circumference, estimate the moisture content of the film being scraped off. Assume the critical moisture content for the food material is 14% on a dry basis, and that conduction heat transfer is through the whole film thickness to give a conservative estimate.

Initial moisture content

= 75 % wet basis

= 0.75/(1 -0.75)

= 3kgkg-1 dry basis.

Total quantity of material on drum

= (πxD x 3/4) x 1 x 0.0003m3

= πx 1 x 3/4 x 1 x 0.0003

= 7.1 x 10-4m3.

Assuming a density of the food paste of 1000 kg m3,Weight on drum

= 7.1 x 10-4x 103

= 0.71kg.

Overall resistance to heat transfer,

1/U = 1/800 + 0.0003/0.55

= 1.25 x 10-3+0.55 x 10-3

= 1.8 x 10-3

Therefore

U= 556 Jm-2s-1oC -1q

= UA Δt

= 556 x 0.75(πx Dx 1) x (138 -100)

= 4.98 x 104Js-1.

= 49.8 kJs-1

Latent heat of evaporation of water = 2257kJkg–1

Rate of evaporation = q/λ

= 49.8/2257

= 0.022kgs-1.

Residence time of food on drum: at 2 rev min-11 revolution takes 30s, but the material is on for 3/4 rev.

Residence time = (3/4) x 30

= 22.5 sec.

Water removed = 22.5 x 0.022

= 0.495kg.

Initial quantity of water = 0.71 x 0.75
= 0.53 kg
dry solids= 0.71 x 0.25
= 0.18kg.
Residual water = (0.53-0.495)= 0.035 kg.
Water content (wet basis) remaining
= 0.035/(0.18 + 0.035) = 16%

33. 1,200 lb of barium nitrate are dissolved in sufficient water to form a saturated solution at 90°C. Assuming that 5% of the weight of the original solution is lost through evaporation, calculate the crop of the crystals obtained when cooled to 20°C. solubility data of barium nitrate at 90°C = 30.6 lb/100 lb water; at 20°C = 9.2 lb/100 lb water

SOLUTION:

xF=(0.306$lbBa(NO3)2lb$ / $water$)x (100 $lbwater$/(100+30.6) $lbfeed$)
=0.2343 $lb(NO3)2lb/$ $feed$
xFF=1,200 $lb(NO3)2$
F=(1,200 $lbBa(NO3)2$)x{ $lbfeed$ / 0.2343 $lbBa(NO3)2$ }
F=5,121.5686 lb
xL=0.092{0$lb(NO3)2$ /$lbwater$} x (100 $lbwater$/(100+9.2) $lbliquor$)
=0.0842$lb(NO3)2/lbliquor$
Consider over-all material balance around the crystallizer
F=V+L+C
V=0.05F
L=0.95(5,121.5686)−C
L=4,865.4902−C⟶$equation$ 1
Consider Ba(NO3)2 balance
xFF=xLL+xCC 1,200
=(0.0842)(L)+(1.0)(C) 1,200
=0.0842L+C⟶$equation$ 2
Substitute 1 in 2
1,200=0.0842(4,865.4902−C)+C
C=1,200−[(0.0842)(4,865.4902)]0.9158
$\boldsymbol{C}$=$\mathbf{862.9894}\boldsymbol{lb}$

8. Summarise in detail about Extraction and Washing equipment.

The first stage in an extraction process is generally mechanical grinding, in which the raw material is shredded, ground or pressed into suitably small pieces or flakes to give a large contact area for the extraction. In some instances, for example in sugar-cane processing and in the extraction of vegetable oils, a substantial proportion of the desired products can be removed directly by expression at this stage and then the remaining solids are passed to the extraction plant. Fluid solvents are easy to pump and so overflows are often easier to handle than underflows and sometimes the solids may be left and solvent from successive stages brought to them.

This is the case in the conventional **extraction battery**. In this a number of tanks, each suitable both for mixing and for settling, are arranged in a row or a ring. The solids remain in the one mixer-settler and the solvent is moved progressively round the ring of tanks, the number, *n*, often being about 12. At any time, two of the tanks are out of operation, one being emptied and the other being filled. In the remaining (*n* - 2), tanks extraction is proceeding with the extracting liquid solvent, usually water, being passed through the tanks in sequence, the "oldest" (most highly extracted) tank receiving the fresh liquid and the "youngest" (newly filled with fresh raw material) tank receiving the most concentrated liquid. After leaving this "youngest" tank, the concentrated liquid passes from the extraction battery to the next stage of the process. After a suitable interval, the connections are altered so that the tank which has just been filled becomes the new “youngest" tank. The former "oldest" tank comes out of the sequence and is emptied, the one that was being emptied is filled and the remaining tanks retain their sequence but with each becoming one stage "older". This procedure which is illustrated in **Fig. 9.7** in effect accomplishes counter current extraction, but with only the liquid physically having to be moved apart from the emptying and filling in the terminal tanks.

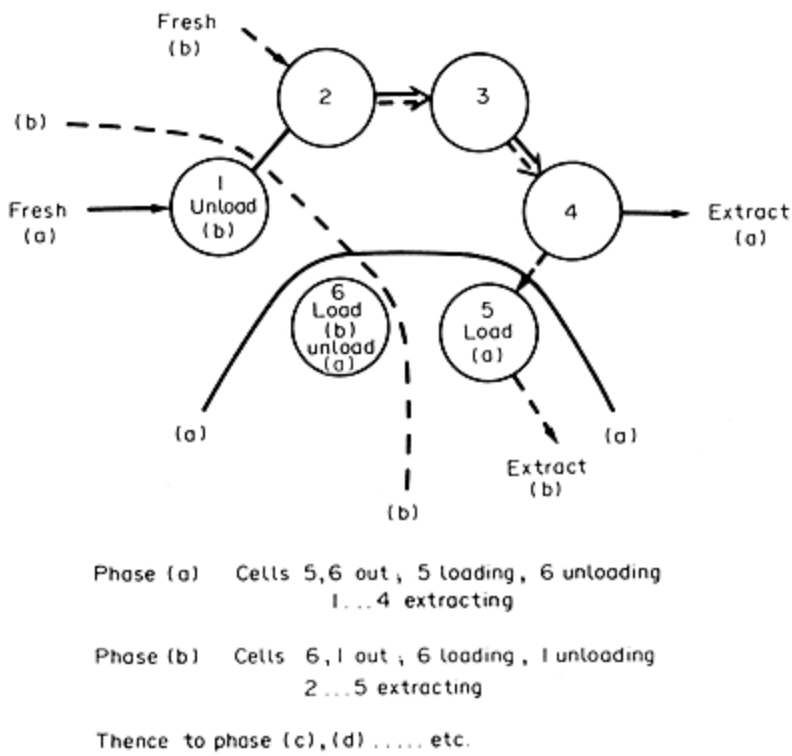

FIG. 9.7 Extraction battery

In the same way and for the same reasons as with counter flow heat exchangers, this counter current (or

counter flow) extraction system provides the maximum mean driving force, the log mean concentration difference in this case, contrasting with the log mean temperature difference in the heat exchanger. This ensures that the equipment is used efficiently.

In some other extractors, the solids are placed in a vertical bucket conveyor and moved up through a tower down which a stream of solvent flows. Other forms of conveyor may also be used, such as screws or metal bands, to move the solids against the solvent flow. Sometimes centrifugal forces are used for conveying, or for separating after contacting.

Washing is generally carried out in equipment that allows flushing of fresh water over the material to be washed. In some cases, the washing is carried out in a series of stages. Although water is cheap, in many cases very large quantities are used for washing so that attention paid to more efficient washing methods may well be worthwhile. Much mechanical ingenuity has been expended upon equipment for washing and many types of washers are described in the literature.