UNIT 1

INTRODUCTION

CAD/CAM

CAD/CAM is a term which means computer-aided design and computer- aided manufacturing. It is the technology concerned with the use of digital computers to perform certain functions in design and production. This technology is moving in the direction of greater integration of design and manufacturing, two activities which have traditionally been treated as distinct and separate functions in a production firm. Ultimately, CAD/CAM will provide the technology base for the computer-integrated factory of the future.

Computer-aided design (CAD) can be defined as the use of computer systems to assist in the creation, modification, analysis, or optimization of a design. The computer systems consist of the hardware and software to perform the specialized design functions required by the particular user firm. The CAD hardware typically includes the computer, one or more graphics display terminals, keyboards, and other peripheral equipment. The CAD software consists of the computer programs to implement computer graphics on the system plus application programs to facilitate the engineering functions of the user company. Examples of these application programs include stress-strain analysis of components, dynamic response of mechanisms, heat-transfer calculations, and numerical control part programming. The collection of application programs will vary from one user firm to the next because their product lines, manufacturing processes, and customer markets are different. These factors give rise to differences in CAD system requirements.

Computer-aided manufacturing (CAM) can be defined as the use of computer systems to plan, manage, and control the operations of a manufacturing plant through either direct or indirect computer interface with the plant's production resources. As indicated by the definition, the applications of computer-aided manufacturing fall into two broad categories:

1. **Computer monitoring and control.** These are the direct applications in which the computer is connected directly to the manufacturing process for the purpose of monitoring or controlling the process.

2. **Manufacturing support applications.** These are the indirect applications in which the computer is used in support of the production operations in the plant, but there is no direct interface between the computer and the manufacturing process.

The distinction between the two categories is fundamental to an understanding of computer-aided manufacturing. It seems appropriate to elaborate on our brief definitions of the two types.

Computer monitoring and control can be separated into monitoring applications and control applications. Computer process monitoring involves a direct computer interface with the manufacturing process for the purpose of observing the process and associated equipment and collecting data from the process. The computer is not used to control the operation directly. The control of the process remains in the hands of human operators, who may be guided by the information compiled by the computer.

Computer process control goes one step further than monitoring by not only observing the process but also controlling it based on the observations. The distinction between monitoring and control is displayed in Figure. With computer monitoring the flow of data between the process and the computer is in one direction only, from the process to the computer. In control, the computer interface allows for a two-way flow of data. Signals are transmitted from the process to the computer, just as in the case of computer monitoring. In addition, the computer issues command signals directly to the manufacturing process based on control algorithms contained in its software.

In addition to the applications involving a direct computer-process interface for the purpose of process monitoring and control, computer-aided manufacturing also includes indirect applications in which the computer serves a support role in the manufacturing operations of the plant. In these applications, the computer is not linked directly to the manufacturing process.

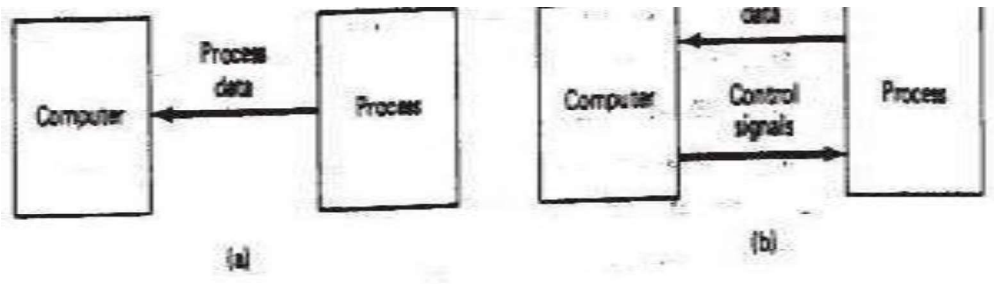

Computer monitoring versus computer control:
(a) computer monitoring, (b) computer control.

Instead, the computer is used "off-line" to provide plans, schedules, forecasts, instructions, and information by which the firm's production resources can be managed more effectively. The form of the relationship between the computer and the process is represented symbolically in Figure. Dashed lines are used to indicate that the communication and control link is an off-line connection, with human beings often required to consumate the interface. Some examples of CAM for manufacturing support that are discussed in subsequent chapters of this book include:

Numerical control part programming by computers. Control programs are prepared for automated machine tools.

Computer-automated process planning. The computer prepares a listing of the operation sequence required to process a particular product or component.

Computer-generate work standards. The computer determines the time standard for a particular production operation.

Production scheduling. The computer determines an appropriate schedule for meeting production requirements.

Material requirements planning. The computer is used to determine when to order raw materials and purchased components and how many should be ordered to achieve the production schedule.

Shop floor control. In this CAM application, data are collected from the factory to determine progress of the various production shop orders.

In all of these examples, human beings are presently required in the application either to provide input to the computer programs or to interpret the computer output and implement the required action.

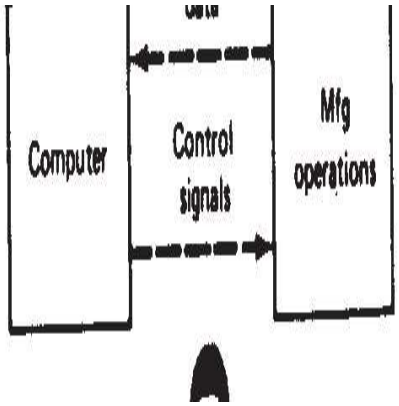

CAM for manufacturing support.

THE PRODUCT CYCLE AND CAD/CAM

For the reader to appreciate the scope of CAD/CAM in the operations of a manufacturing firm, it is appropriate to examine the various activities and functions that must be accomplished in the design and manufacture of a product. We will refer to these activities and functions as the product cycle.

A diagram showing the various steps in the product cycle is presented in Figure. The cycle is driven by customers and markets which demand the product. It is realistic to think of these as a large collection of diverse industrial and consumer markets rather than one monolithic market. Depending on the particular customer group, there will be differences in the way the product cycle is activated. In some cases, the design functions are performed by the customer and the product is manufactured by a different firm. In other cases, design and manufacturing is accomplished by the same firm. Whatever the case, the product cycle begins with a concept, an idea for a product. This concept is cultivated, refined, analyzed, improved, and translated into a plan for the product through the design engineering process. The plan is documented by drafting Ii set of engineering drawings showing how the product is made and providing a set of specifications indicating how the product should perform.

Except for engineering changes which typically follow the product throughout its life cycle, this completes the design activities in Figure. The next activities involve the manufacture of the product. A process plan is formulated which specifies the sequence of production operations required to make the product. New equipment and tools must sometimes be acquired to produce the new product. Scheduling provides a plan that commits the company to the manufacture of certain quantities of the product by certain dates. Once all of these plans are formulated, the product goes into production, followed by quality testing, and delivery to the customer.

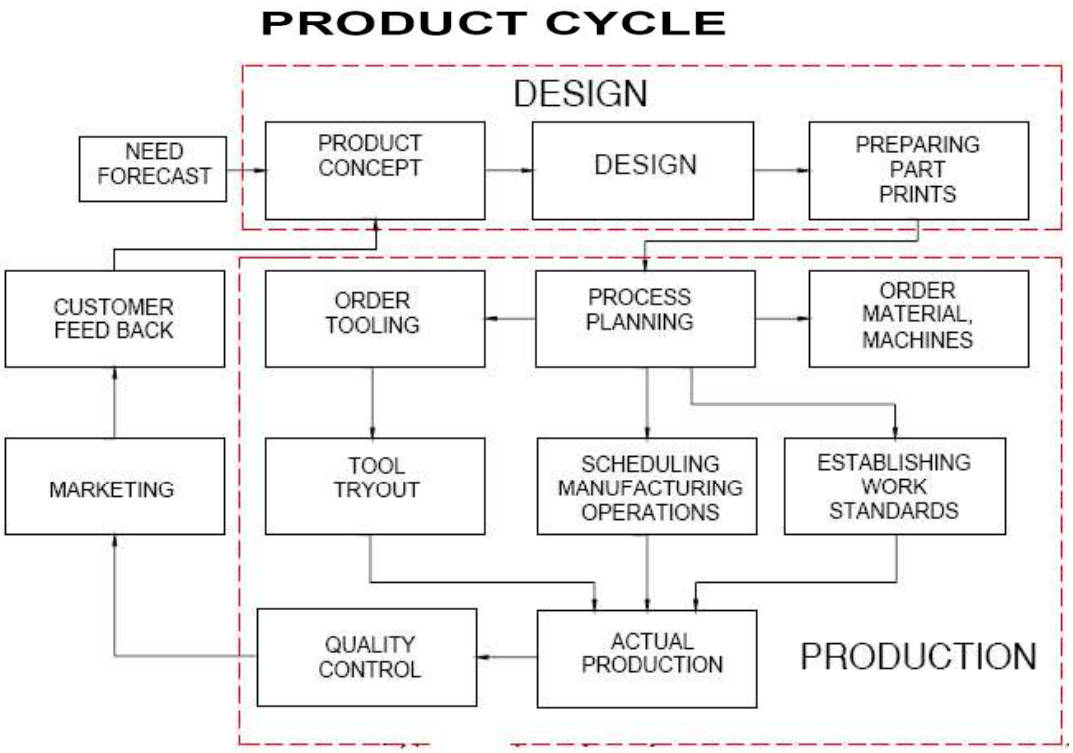

PRODUCT CYCLE IN CONVENTIONAL ENVIRONMENT

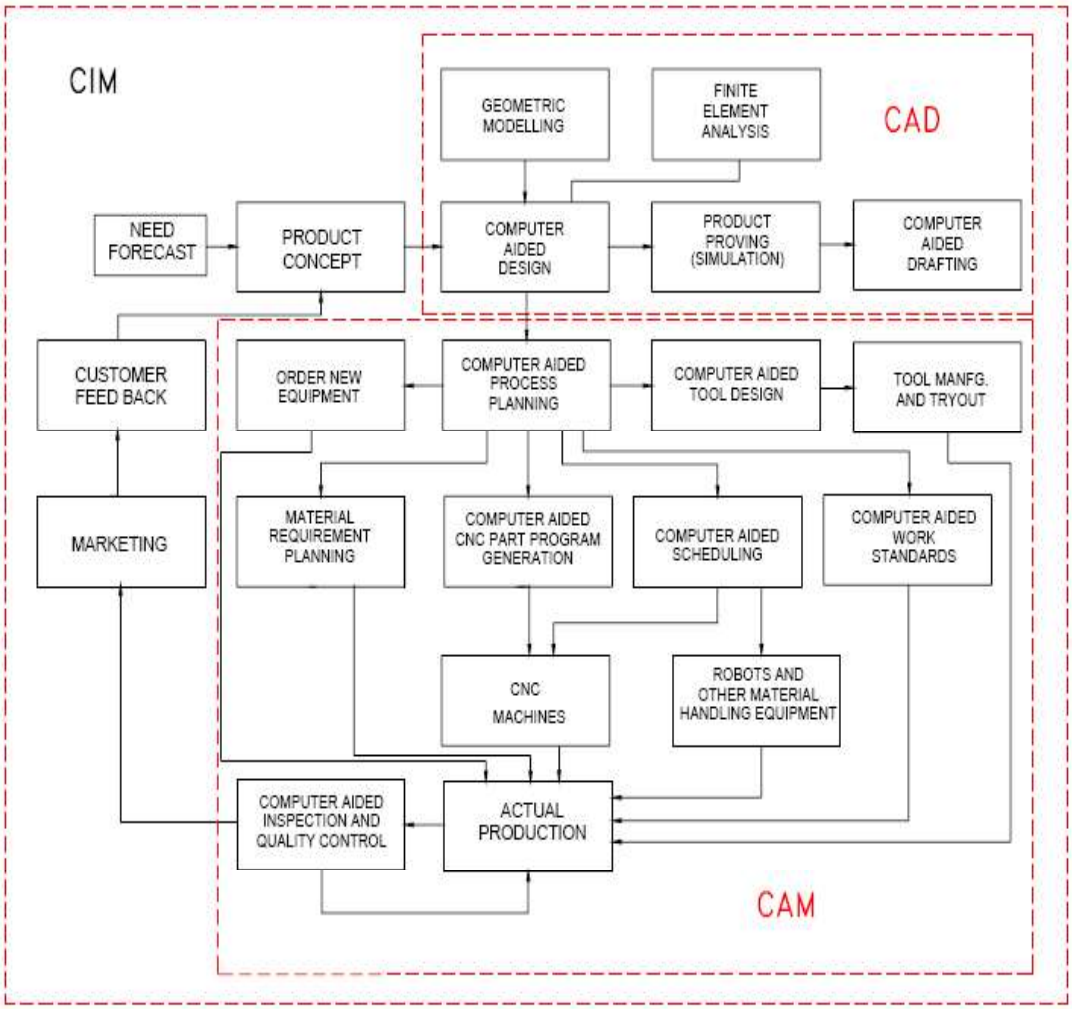

PRODUCT CYCLE IN AN COMPUTERISED ENVIRONMENT

Product cycle (design and manufacturing).

The impact of CAD/CAM is manifest in all of the different activities in the product cycle, as indicated in Figure. Computer-aided design and automated drafting are utilized in the conceptualization, design, and documentation of the product. Computers are used in process planning and scheduling to perform these functions more efficiently. Computers are used in production to monitor and control the manufacturing operations. In quality control, computers are used to perform inspections and performance tests on the product and its components.

As illustrated in Figure, CAD/CAM is overlaid on virtually all of the activities and functions of the product cycle. In the design and production operations of a modem manufacturing firm, the computer has become a pervasive, useful, and indispensable tool. It is

strategically important and competitively imperative that manufacturing firms and the people who are employed by them understand CAD/CAM.

AUTOMATION AND CAD/CAM

Automation is defined as the technology concerned with the application of complex mechanical, electronic, and computer-based systems in the operation and control of production. It is the purpose of this section to establish the relationship between CAD/CAM and automation.

As indicated in previous Section, there are differences in the way the product cycle is implemented for different firms involved in production. Production activity can be divided into four main categories:

1. Continuous-flow processes
2. Mass production of discrete products
3. Batch production
4. Job shop production

The definitions of the four types are given in Table. The relationships among the four types in terms of product variety and production quantities can be conceptualized as shown in Figure. There is some overlapping of the categories as the figure indicates. Table provides a list of some of the notable achievements in automation technology for each of the four production types.

One fact that stands out from Table is the importance of computer technology in automation. Most of the automated production systems implemented today make use of computers. This connection between the digital computer and manufacturing automation may seem perfectly logical to the reader. However, this logical connection has not always existed. For one thing, automation technology

TABLE Four Types of Production

Category	Description
l. Continuous-flow processes	Continuous dedicated production of large amounts of bulk product. Examples include continuous chemical plants and oil refineries
2. Mass production of discrete products	Dedicated production of large quantities of one product (with perhaps limited model variations). Examples include automobiles, appliances, and engine blocks.
3. Batch production	Production of medium lot sizes of the same product or component. The lots may be produced once or repeated periodically. Examples include books, clothing, and certain industrial machinery.
4. Job shop production	Production of low quantities, often one of a kind, of specialized products. The products are often customized and technologically complex. Examples include prototypes, aircraft, machine tools, and other equipment.

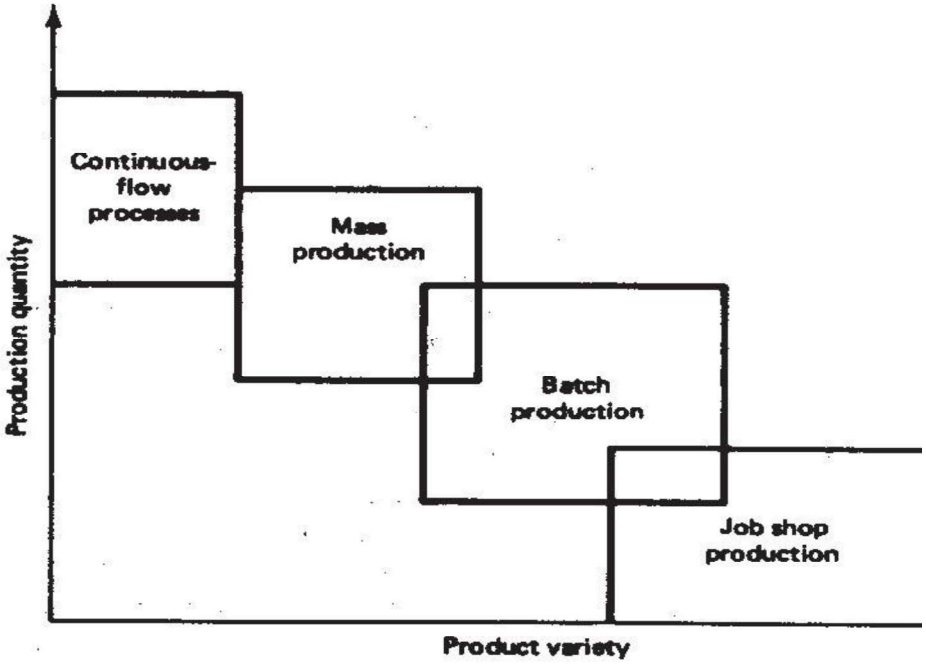

Four production types related to quantity and product variation

TABLE Automation Achievements for the Four Types of Production

Category	Automation achievements
l. Continuous-flow processes	Flow process from beginning to end Sensor technology available to measure important process variables Use of sophisticated control and optimization strategies Fully computer-automated plants
2. Mass production of discrete products	Automated transfer machines Dial indexing machines Partially and fully automated assembly lines Industrial robots for spot welding, parts handling, machine loading, spray painting, etc.
	Automated materials handling systems Computer production monitoring
3. Batch production	Numerical control (NC), direct numerical control (DNC), computer numerical control (CNC) Adaptive control machining Robots for arc welding, parts handling, etc. Computer-integrated manufacturing systems
4. Job shop production	Numerical control, computer numerical control

FUNDAMENTALS OF CAD

INTRODUCTION

The computer has grown to become essential in the operations of business, government, the military, engineering, and research. It has also demonstrated itself, especially in recent years, to be a very powerful tool in design and manufacturing. In this and the following two chapters, we consider the application of computer technology to the design of a product. This secton provides an overview of computer-aided design.

The CAD system defined

As defined in previous section, computer-aided design involves any type of design activity which makes use of the computer to develop, analyze, or modify an

engineering design. Modem CAD systems (also often called CAD/CAM systems) are based on interactive computer graphics (ICG).Interactive computer graphics denotes a user-oriented system in which the computer is employed to create, transform, and display data in the form of pictures or symbols. The user in the computer graphics design system is the designer, who communicates data and commands to the computer through any of several input devices. The computer communicates with the user via a cathode ray tube (CRT). The designer creates an image on the CRT screen by entering commands to call the desired software sub-routines stored in the computer. In most systems, the image is constructed out of basic geometric elements-points, lines, circles, and so on. It can be modified according to the commands of the designer- enlarged, reduced in size, moved to another location on the screen, rotated, and other transformations. Through these various manipulations, the required details of the image are formulated.

The typical ICG system is a combination of hardware and software. The hardware includes a central processing unit, one or more workstations (including the graphics display terminals), and peripheral devices such as printers. Plotters, and drafting equipment. Some of this hardware is shown in Figure. The software consists of the computer programs needed to implement graphics processing on the system. The software would also typically include additional specialized application programs to accomplish the particular engineering functions required by the user company.

It is important to note the fact that the ICG system is one component of a computer-aided design system. As illustrated in Figure, the other major component is the human designer. Interactive computer graphics is a tool used by the designer to solve a design problem. In effect, the ICG system magnifies the powers of the designer. This bas been referred to as the synergistic effect. The designer performs the portion of the design process that is most suitable to human intellectual skills (conceptualization, independent thinking); the computer performs the task: best suited to its capabilities (speed of calculations, visual display, storage of large 8IWWIts of data), and the resulting system exceeds the sum of its components.

There are several fundamental reasons for implementing a computer-aided design system.

l. To increase the productivity of the designer. This is accomplished by helping the designer to the product and its component subassemblies and parts; and by reducing the time required in synthesizing, analyzing, and documenting the design. This productivity improvement translates not only into lower design cost but also into shorter project completion times.

2. To improve the quality of design. A CAD system permits a more thorough engineering analysis and a larger number of design alternatives can be investigated. Design errors are also reduced through the greater accuracy provided by the system. These factors lead to a better design.

3. To improve communications. Use of a CAD system provides better engineering drawings, more standardization in the drawings, better documentation of the design, fewer drawing errors and greater legibility.

4. To create a database for manufacturing. In the process of creating the documentation for the product design (geometries and dimensions of the product and its components, material specifications for components, bill of materials, etc.), much of the required database to manufacture the product is also created.

THE DESIGN PROCESS

Before examining the several facets of computer-aided design, let us first consider the general design process. The process of designing something is characterized by Shigley as an iterative procedure, which consists of six identifiable steps or phases:-

l. Recognition of need

2. Definition of problem

3. Synthesis

4. Analysis and optimization

5. Evaluation

6. Presentation

Recognition of need involves the realization by someone that a problem exists for which some corrective action should be taken. This might be the identification of some defect in a current machine design by an engineer or the perception of a new product marketing opportunity by a salesperson. Definition of

the problem involves a thorough specification of the item to be designed. This specification includes physical and functional characteristics, cost, quality, and operating performance.

Synthesis and analysis are closely related and highly interactive in the design process. A certain component or subsystem of the overall system is conceptualized by the designer, subjected to analysis, improved through this analysis procedure, and redesigned. The process is repeated until the design has been optimized within the constraints imposed on the designer. The components and subsystems are synthesized into the final overall system in a similar interactive manner.

Evaluation is concerned with measuring the design against the specifications established in the problem definition phase. This evaluation often requires the fabrication and testing of a prototype model to assess operating performance, quality, reliability, and other criteria. The final phase in the design process is the presentation of the design. This includes documentation of the design by means of drawings, material specifications, assembly lists, and so on. Essentially, the documentation requires that a design database be created. Figure illustrates the basic steps in the design process, indicating its iterative nature.

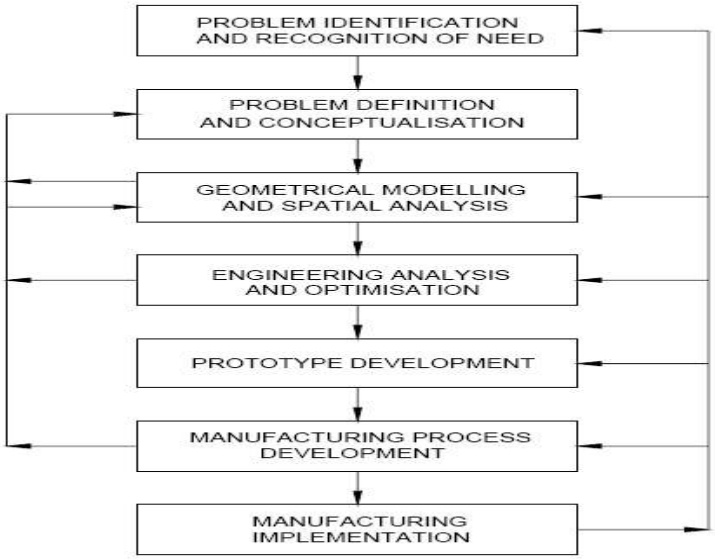

The general design process as defined by Shigley .

Engineering design has traditionally been accomplished on drawing boards, with the design being documented in the form of a detailed engineering drawing. Mechanical design includes the drawing of the complete product as well as its components and subassemblies, and the tools and fixtures required to manufacture the product. Electrical design is concerned with the preparation of circuit diagrams, specification of electronic components, and so on. Similar manual documentation is required in other engineering design fields (structural design, aircraft design, chemical engineering design, etc.). In each engineering discipline, the approach has traditionally been to synthesize a preliminary design manually and then to subject that design to some form of analysis. The analysis may involve sophisticated engineering calculations or it may involve a very subjective judgment of the aesthete appeal possessed by the design. The analysis procedure identifies certain improvements that can he made in the design. As stated previously, the process is iterative. Each iteration yields an improvement in the design. The trouble with this iterative process is that it is time consuming. Many engineering labor hours are required to complete the design project.

THE APPLICATION OF COMPUTERS FOR DESIGN

The various design-related tasks which are performed by a modem computer-aided design-system can be grouped into four functional areas:

l. Geometric modeling

2. Engineering analysis

3. Design review and evaluation

4. Automated drafting

These four areas correspond to the final four phases in Shigley's general design process, illustrated in Figure. Geometric modeling corresponds to the synthesis phase in which the physical design project takes form on the ICG system. Engineering analysis corresponds to phase 4, dealing with analysis and optimization. Design review and evaluation is the fifth step in the general design procedure. Automated drafting involves a procedure for converting the design image data residing in computer memory into a hard-copy document. It represents an important

method for presentation (phase 6) of the design. The following four sections explore each of these four CAD functions.

Geometric modeling

In computer-aided design, geometric modeling is concerned with the computer-compatible mathematical description of the geometry of an object. The mathematical description allows the image of the object to be displayed and manipulated on a graphics terminal through signals from the CPU of the CAD system. The software that provides geometric modeling capabilities must be designed for efficient use both by the computer and the human designer.

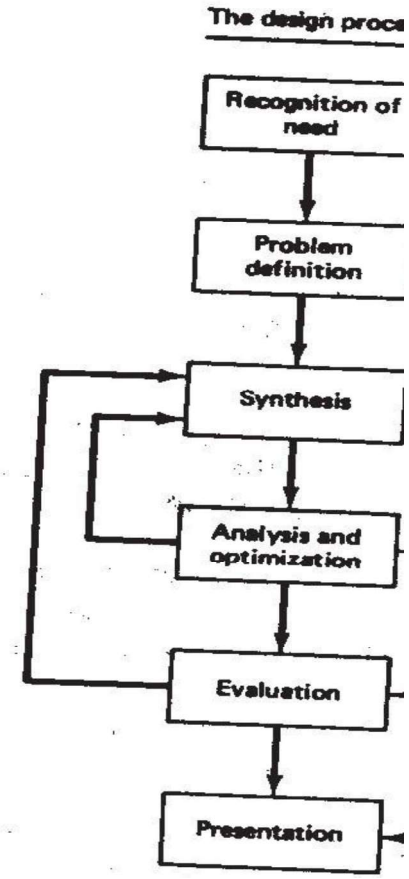

To use geometric modeling, the designer constructs, the graphical image of the object on the CRT screen of the ICG system by inputting three types of

commands to the computer. The first type of command generates basic geometric elements such as points, lines, and circles. The second command type is used to accomplish scaling, rotating, or other transformations of these elements. The third type of command causes the various elements to be joined into the desired shape of the object being creaed on the ICG system. During the geometric modeling process, the computer converts the commands into a mathematical model, stores it in the computer data files, and displays it as an image on the CRT screen. The model can subsequently be called from the data files for review, analysis, or alteration.

There are several different methods of representing the object in geometric modeling. The basic form uses wire frames to represent the object. In this form, the object is displayed by interconnecting lines as shown in Figure. Wire frame geometric modeling is classified into three types depending on the capabilities of the ICG system. The three types are:

l. 2D. Two-dimensional representation is used for a flat object.

2. 2½D. This goes somewhat beyond the 2D capability by permitting a three-dimensional object to be represented as long as it has no side-wall details.

3. 3D. This allows for full three-dimensional modeling of a more complex geometry.

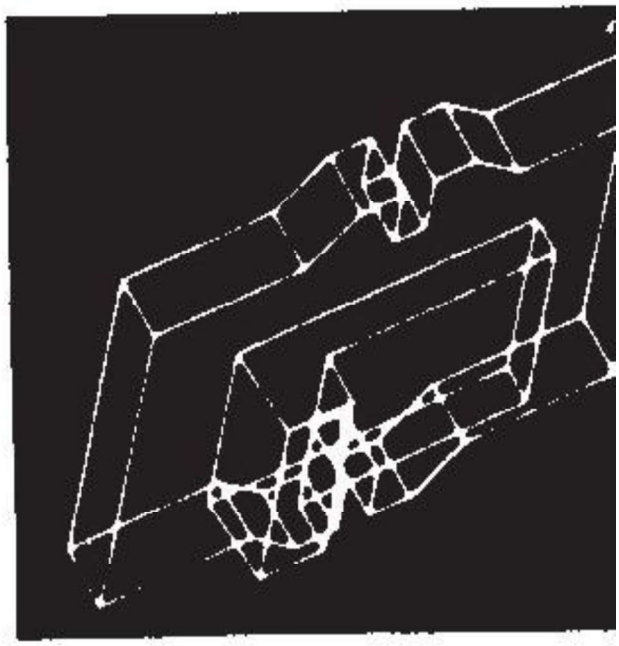

Example of wire-frame drawing of a part.

Even three-dimensional wire-frame representations of an object are sometimes inadequate for complicated shapes. Wire-frame models can be enhanced by several different methods. Figure shows the same object shown in the previous figure but with two possible improvements. lbe first uses dashed lines to portray the rear edges of the object, those which would be invisible from the front. lbe second enhancement removes the hidden lines completely, thus providing a less cluttered picture of the object for the viewer. Some CAD systems have an automatic "hidden-line removal feature," while other systems require the user to identify the lines that are to be removed from view. Another enhancement of the wire-frame model involves providing a surface representation which makes the object appear solid to the viewer. However, the object is still stored in the computer as a wire-frame model.

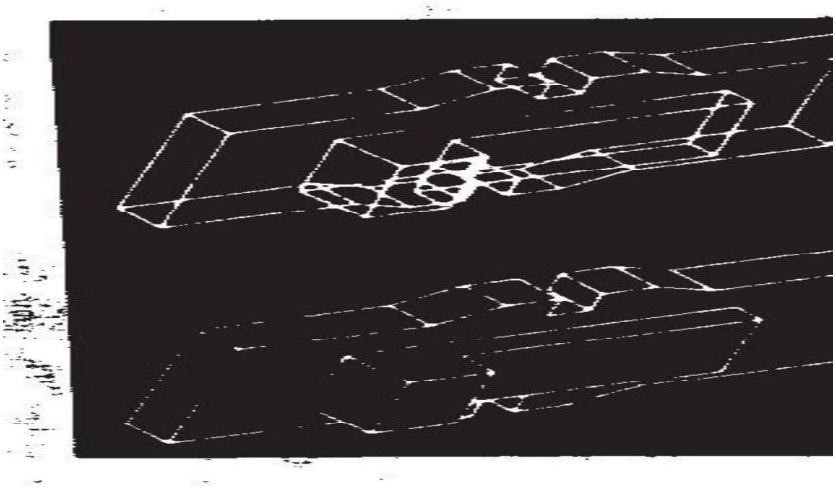

Same workpart as shown in Figure 4.4 but with (a) dashed lines lO show rear edges of part, and (b) hidden-line removal. (Courtesy of Computervision Corp.)

Solid model of yoke part as displayed on a computer graphics system. (Courtesy of Computervision Corp.)

The most advanced method of geometric modeling is solid modeling in three dimensions. This method, illustrated in Figure, typically uses solid geometry shapes called primitives to construct the object.

Another feature of some CAD systems is color graphics capability. By means of colour, it is possible to display more information on the graphics screen. Colored images help to clarify components in an assembly, or highlight dimensions, or a host of other purposes.

Engineering analysis

In the formulation of nearly any engineering design project, some type of analysis is required. The analysis may involve stress-strain calculations, heat-transfer computations, or the use of differential equations to describe the dynamic behavior of the system being designed. The computer can be used to aid in this analysis work. It is often necessary that specific programs be developed internally by the engineering analysis group to solve a particular design problem. In other situations, commercially available general-purpose programs can be used to perform the engineering analysis.

Turnkey CAD/CAM systems often include or can be interfaced to engineering analysis software which can be called to operate on the current design model.

We discuss two important examples of this type:

Analysis of mass properties

Finite-element analysis

The analysis of mass properties is the analysis feature of a CAD system that has probably the widest application. It provides properties of a solid object being analyzed, such as the surface area, weight, volume, center of gravity, and moment of inertia. For a plane surface (or a cross section of a solid object) the corresponding computations include the perimeter, area, and inertia properties.

Probably the most powerful analysis feature of a CAD system is the finite-element method. With this technique, the object is divided into a large number of finite elements (usually rectangular or triangular shapes) which form an interconnecting network of concentrated nodes. By using a computer with significant computational capabilities, the entire Object can be analyzed for stress-strain, heat transfer, and other characteristics by calculating the behavior of each node. By determining the interrelating behaviors of all the nodes in the system, the behavior of the entire object can be assessed.

Some CAD systems have the capability to define automatically the nodes and the network structure for the given object. lbe user simply defines certain parameters for the finite-element model, and the CAD system proceeds with the computations.

The output of the finite-element analysis is often best presented by the system in graphical format on the CRT screen for easy visualization by the user, For example, in stress-strain analysis of an object, the output may be shown in the form of a deflected shape superimposed over the unstressed object. This is illustrated in Figure. Color graphics can also be used to accentuate the comparison before and after deflection of the object. This is illustrated in Figure for the same image as that shown in Figure . If the finite-element analysis indicates behavior of the design which is undesirable, the designer can modify the shape and recompute the finite-element analysis for the revised design.

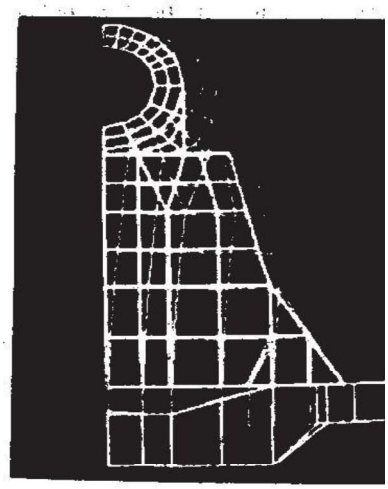

Finite-element modeling for stress-strain analysis. Graphics display shows strained part superimposed on unstrained part for comparison.

Design review and evaluation

Checking the accuracy of the design can be accomplished conveniently on the graphics terminal. Semiautomatic dimensioning and tolerancing routines which assign size specifications to surfaces indicated by the user help to reduce the possibility of dimensioning errors. The designer can zoom in on part design details and magnify the image on the graphics screen for close scrutiny.

A procedure called layering is often helpful in design review. For example, a good application of layering involves overlaying the geometric image of the final shape of the machined part on top of the image of the rough casting. This ensures that sufficient material is available on the casting to acccomplish the final machined dimensions. This procedure can be performed in stages to check each successive step in the processing of the part.

Another related procedure for design review is interference checking. This involves the analysis of an assembled structure in which there is a risk that the components of the assembly may occupy the same space. This risk occurs in the design of large chemical plants, air-separation cold boxes, and other complicated piping structures.

One of the most interesting evaluation features available on some computer-aided design systems is kinematics. The available kinematics packages provide the capability to animate the motion of simple designed mechanisms such as hinged

components and linkages. This capability enhances the designer‘s visualization of the operation of the mechanism and helps to ensure against interference with other components. Without graphical kinematics on a CAD system, designers must often resort to the use of pin-and-cardboard models to represent the mechanism. commercial software packages are available to perform kinematic analysis. Among these are programs such as ADAMS (Automatic Dynamic Analysis of Mechanical Systems), developed at the University of Michigan. This type of program can be very useful to the designer in constructing the required mechanism to accomplish a specified motion and/or force.

Automated drafting

Automated drafting involves the creation of hard-copy engineering drawings directly from the CAD data base. In some early computer-aided design departments, automation of the drafting process represented the principal justification for investing in the CAD system. Indeed, CAD systems can increase productivity in the drafting function by roughly five times over manual drafting.

Some of the graphics features of computer-aided design systems lend them-selves especially well to the drafting process. These features include automatic dimensioning, generation of crosshatched areas, scaling of the drawing, and the capability to develop sectional views and enlarged views of particular path details. The ability to rotate the part or to perform other transformations of the image (e.g., oblique, isometric, or perspective views), as illustrated in Figure, can be of significant assistance in drafting. Most CAD systems are capable of generating as many as six views of the part. Engineering drawings can be made to adhere to company drafting standards by programming the standards into the CAD system. Figure shows an engineering drawing with four views displayed. This drawing was produced automatically by a CAD system. Note how much the isometric view promotes a higher level of understanding of the object for the user than the three orthographic views.

Parts classification and coding

In addition to the four CAD functions described above, another feature of the CAD data base is that it can be used to develop a parts classification and coding system. Parts classification and coding involves the grouping of similar part designs into classes, and relating the similarities by mean of a coding scheme. Designers can

use the classification and coding system to retrieve existing part designs rather than always redesigning new parts.

CREATING THE MANUFACTURING DATA BASE

Another important reason for using a CAD system is that it offers the opportunity to develop the data base needed to manufacture the product. In the conventional manufacturing cycle practiced for so many years in industry, engineering drawings were prepared by design draftsmen and then used by manufacturing engineers to develop the process plan (i.e., the "route sheets"). The activities involved in designing the product were separated from the activities associated with process planning. Essentially, a two-step procedure was employed. This was both time consuming and involved duplication of effort by design and manufacturing personnel. In an integrated CAD/CAM system, a direct link is established between product design and manufacturing: It" is the goal of CAD/CAM not only to automate certain phases of design and certain phases of manufacturing, but also to automate the transition from design to manufacturing. Computer-based systems have been developed which create much of the data and documentation required to plan and manage the manufacturing operations for the product.

The manufacturing data base is an integrated CAD/CAM data base. It includes all the data on the product generated during design (geometry data, bill of materials and parts lists, material specifications, etc.) as well as additional data required for manufacturing much of which is based Oll the product design. Figure 4.lO shows how the CAD/CAM data base is related to design and manufacturing in a typical production-oriented company.

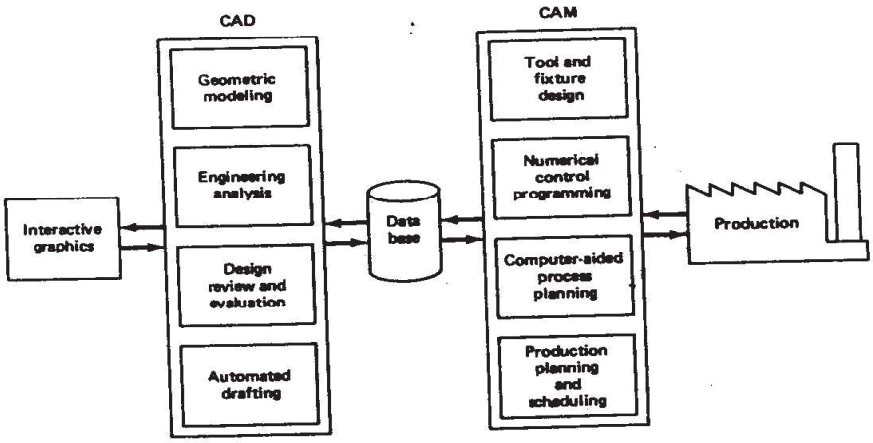

FIGURE Desirable relationship of CAD/CAM data base to CAD and CAM.

BENERTS OF COMPUTER-AIDED DESIGN

There are many benefits of computer-aided design, only some of which can be easily measured. Some of the benefits are intangible, reflected in improved work quality, more pertinent and usable information, and improved control, all of which are difficult to quantify. Other benefits are tangible, but the savings from them show up far downstream in the production process, so that it is difficult to assign a dollar figure to them in the design phase. Some of the benefits that derive from implementing CAD/CAM can be directly measured. Table provides a checklist of potential benefits of an integrated CAD/CAM system. In the subsections that follow, we elaborate on some of these advantages.

Productivity improvement in design

Increased productivity translates into a more competitive position for the firm because it will reduce staff requirements on a given project. This leads to lower costs in addition to improving response time on projects with tight schedules.

Surveying some of the larger CAD/CAM vendors, one finds that the Productivity improvement ratio for a designer/draftsman is usually given as a range, typically from a low end of 3: 1 to a high end in excess of lO: 1 (often far in excess of that figure). There are individual cases in which productivity has been increased by a factor of lOO, but it would be inaccurate to represent that figure as typical.

TABLE Potential Benefits That May Result from implementing CAD as Part of an Integrated CAD/CAM System.

l. Improved engineering productivity
2. Shorter lead times
3. Reduced engineering personnel requirements
4. Customer modifications are easier to make
5. Faster response to requests for quotations
6. Avoidance of subcontracting to meet schedules
7. Minimized transcription errors
8. Improved accuracy of design
9. In analysis, easier recognition of component interactions
lO. Provides better functional analysis to reduce prototype testing
ll. Assistance in preparation of documentation
l2. Designs have more standardization
l3. Better designs provided

14. Improved productivity in tool design
15. Better knowledge of costs provided
16. Reduced training time for routine drafting tasks and NC part programming
17. Fewer errors in NC part programming
18. Provides the potential for using more existing parts and tooling
19. Helps ensure designs are appropriate to existing manufacturing techniques
20. Saves materials and machining time by optimization algorithms
21. Provides operational results on the status of work in progress
22. Makes the management of design personnel on projects more effective
23. Assistance in inspection of complicated parts
24. Better communication interfaces and greater understanding among engineers, designers, drafters, management, and different project groups.

Productivity improvement in computer-aided design as compared to the traditional design process is dependent on such factors as:

Complexity of the engineering drawing

Level of detail required in the drawing

Degree of repetitiveness in the designed parts

Degree of symmetry in the parts

Extensiveness of library of commonly used entities

As each of these factors is increased. the productivity advantage of CAD will tend to increase

Shorter lead times

Interactive computer-aided design is inherently faster than the traditional design. It also speeds up the task of preparing reports and lists (e.g., the assembly lists) which are normally accomplished manually. Accordingly, it is possible with a CAD system to produce a finished set of component drawings and the associated reports in a relatively short time. Shorter lead times in design translate into shorter elapsed time between receipt of a customer order and delivery of the final product. The enhanced productivity of designers working with CAD systems will tend to reduce the prominence of design, engineering analysis, and drafting as critical time elements in the overall manufacturing lead time.

Design analysis

The design analysis routines available in a CAD system help to consolidate the design process into a more logical work pattern. Rather than having a back- and-forth exchange between design and analysis groups, the same person can perform the analysis while remaining at a CAD workstation. This helps to improve the concentration of designers, since they are interacting with their designs in a real-time sense. Because of this analysis capability, designs can be created which are closer to optimum. There is a time saving to be derived from the computerized analysis routines, both in designer time and in elapsed time. This saving results from the rapid response of the design analysis and from the tune no longer lost while the design finds its way from the designer's drawing board to the design analyst's queue and back again.

Fewer design errors

Interactive CAD systems provide an intrinsic capability for avoiding design, drafting, and documentation errors. Data entry, transposition, and extension errors that occur quite naturally during manual data compilation for preparation of a bill of materials are virtually eliminated. One key reason for such accuracy is simply that

No manual handling of information is required once the initial drawing has been developed. Errors are further avoided because interactive CAD systems perform time-consuming repetitive duties such as multiple symbol placement, and sorts by area and by like item, at high speeds with consistent and accurate results. Still more errors can be avoided because a CAD system, with its interactive capabilities, can be programmed to question input that may be erroneous. For example, the system might question a tolerance of O.OOOO2 in. It is likely that the user specified too many zeros. The success of this checking would depend on the ability of the CAD system designers to determine what input is likely to be incorrect and hence, what to question.

Greater accuracy in design calculations

There is also a high level of dimensional control, far beyond the levels of accuracy attainable manually. Mathematical accuracy is often to l4 significant decimal places. The accuracy delivered by interactive CAD systems in three-dimensional curved space designs is so far behind that provided by manual calculation methods that there is no real comparison.

Computer-based accuracy pays off in many ways. Parts are labeled by the same recognizable nomenclature and number throughout all drawings. In some CAD systems, a change entered on a single item can appear throughout the entire documentation package, effecting the change on all drawings which utilize that part. The accuracy also shows up in the form of more accurate material and cost estimates and tighter procurement scheduling. These items are especially important in such cases as long-lead-time material purchases.

Standardization of design, drafting, and documentation procedures

The single data base and operating system is common to all workstations in the CAD system: Consequently, the system provides a natural standard for design/drafting procedure -With interactive computer-aided design, drawings are standardized as they are drawn; there is no confusion as to proper procedures because the entire format is "built into" the system program.

Drawings are more understandable

Interactive CAD is equally adept at creating and maintaining isometrics and oblique drawings as well as the simpler orthographies. All drawings can he generated and updated with equal ease. Thus an up-to-date version of any drawing type can always he made available.

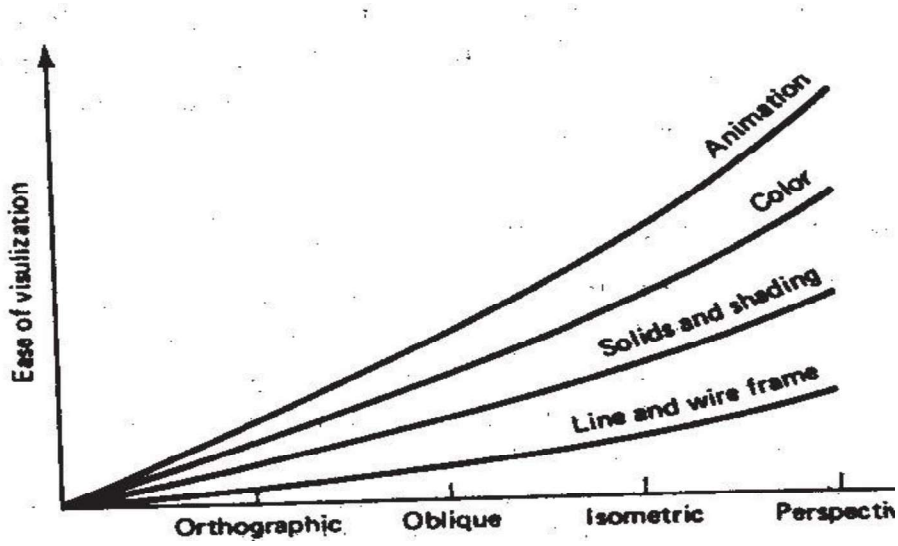

FIGURE Improvement in visualization of images for various drawing types and computer graphics features.

In general, ease of visualization of a drawing relates directly to the projection used. Orthographic views are less comprehensible than isometrics. An isometric view is usually less understandable than a perspective view. Most actual construction drawings are "line drawings." The addition of shading increases comprehension. Different colors further enhance understanding. Finally, animation of the images on the CRT screen allows for even greater visualization capability. The various relationships are illustrated in Figure..

Improved procedures for engineering changes

Control and implementation of engineering changes is significantly improved with computer-aided design. Original drawings and reports are stored in the data base of the CAD system. This makes them more accessible than documents kept in a drawing vault. They can be quickly checked against new information. Since data storage is extremely compact, historical information from previous drawings can be easily retained in the system's data base, for easy comparison with current design/drafting needs.

Benefits in manufacturing

The benefits of computer-aided design carry over into manufacturing. As indicated previously, the same CAD/CAM data base is used for manufacturing planning and control, as well as for design. These manufacturing benefits are found in the following areas:

Tool and fixture design for manufacturing

Numerical control part programming

Computer-aided process planning

Assembly lists (generated by CAD) for production

Computer-aided inspection

Robotics planning

Group technology

Shorter manufacturing lead times through better scheduling

These benefits are derived largely from the CAD/CAM data base, whose initial framework is established during computer-aided design. We will discuss the many facets of computer-aided manufacturing in later chapters. In the remainder of this chapter, let us explore several applications that utilize computer graphics technology to solve various problems in engineering and related fields.

HARDWARE IN COMPUTER-AIDED DESIGN

INTRODUCTION

Hardware components for computer-aided design are available in a variety of sizes, configurations, and capabilities. Hence it is possible to select a CAD system that meets the particular computational and graphics requirements of the user firm. Engineering firms that are not involved in production would choose a system exclusively for drafting and design-related functions. Manufacturing firms would choose a system to be part of a company-wide CAD/CAM system. Of course, the CAD hardware is of little value without the supporting software for the system, and we shall discuss the software for computer-aided design in the following chapter.

a modem computer-aided design system is based on interactive computer graphics (ICG). However, the scope of computer-aided design includes other computer systems as well. For example, computerized design has also been accomplished in a batch mode, rather than interactively. Batch design means that data are supplied to the system (a deck of computer cards is traditionally used for this purpose) and then the system proceeds to develop the details of the design. The disadvantage of the batch operation is that there is a time lag between when the data are submitted and when the answer is received back as output. With interactive graphics, the system provides an immediate response to inputs by the user. The user and the system are in direct communication with each other, the user entering commands and responding to questions generated by the system.

Computer-aided design also includes nongraphic applications of the computer in design work. These consist of engineering results which are best displayed in other than graphical form. Nongraphic hardware (e.g., line printers) can be employed to create rough images on a piece of paper by appropriate combinations of characters and symbols. However, the resulting pictures, while they may create

interesting wall posters, are not suitable for design purposes.

The hardware we discuss in this chapter is restricted to CAD systems that utilize interactive computer graphics. Typically, a stand-alone CAD system would include the following hardware components:

One or more design workstations. These would consist of:

A graphics terminal

Operator input devices

One or more plotters and other output devices

Central processing unit (CPU)

Secondary storage

These hardware components would be arranged in a configuration as illustrated in Figure. The following sections discuss these various hardware components and the alternatives and options that can be obtained in each category.

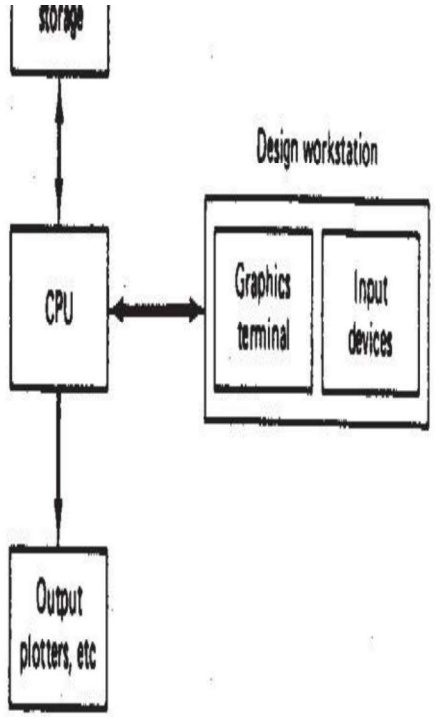

FIGURE Typical configuration of hardware components in a stand-alone CAD system. There would likely be more than one design workstation.

THE DESIGN WORKSTATION

The CAD workstation is the system interface with the outside world. It represents a significant factor in determining how convenient and efficient it is for a designer to use the CAD system. The workstation must accomplish five functions:

l. It must interface with the central processing unit.

2. It must generate a steady graphic image for the user.

3. It must provide digital descriptions of the graphic image.

4. It must translate computer commands into operating functions.

5. It must facilitate communication between the user and the system]

The use of interactive graphics has been found to be the best approach to accomplish these functions. A typical interactive graphics workstation would consist of the following hardware Components:

A graphics terminal
Operator input devices
A graphics design workstation showing these components is illustrated in Figure.

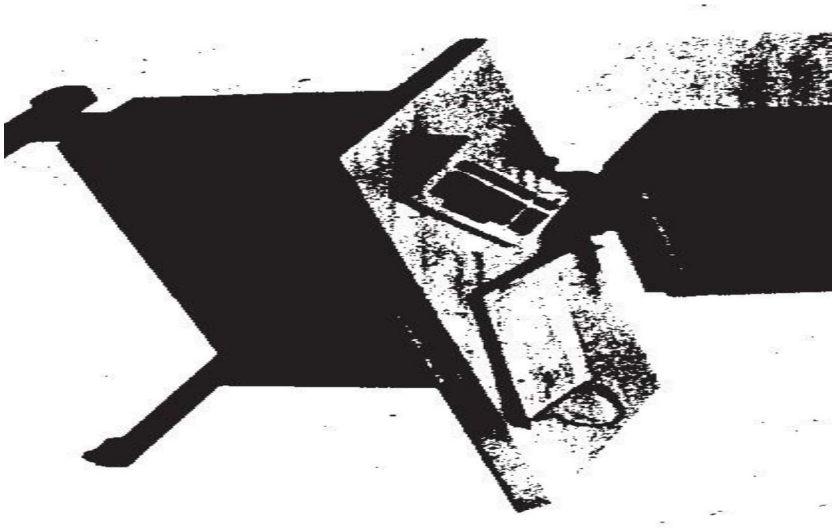

FIGURE Interactive graphics design workstation showing graphics terminal and two

input devices: alphanumeric keyboard and electronic tablet and pen.

THE GRAPHICS TERMINAL

'There are various technological approaches which have been applied to the development of graphics terminals. The technology continues to evolve as CAD system manufactures attempt to improve their products and reduce their costs. In this section we present a discussion of the current technology in interactive computer graphics terminals.

Image generation in computer graphics

Nearly all computer graphics terminals available today use the cathode ray tube (CRT) as the display device. Television sets use a form of the same device as the picture tube. 'The operation of the CRT is illustrated in Figure. A heated cathode emits a high-speed electron beam onto a phosphor-coated glass screen. 'The electrons energize the phosphor coating, causing it to glow at the points where the beam makes contact. By focusing the electron beam, changing its intensity, and controlling its point of contact against the phosphor coating through the use of a deflector system, the beam can be made to generate a picture on the CRT screen.

There are two basic techniques used in current computer graphics terminals for generating the image on the CRT screen. They are:

l. Stroke writing

2. Raster scan

Other names for the stroke-writing technique include line drawing, random position, vector writing, stroke writing, and directed beam. Other names for the raster scan technique include digital TV and scan graphics.

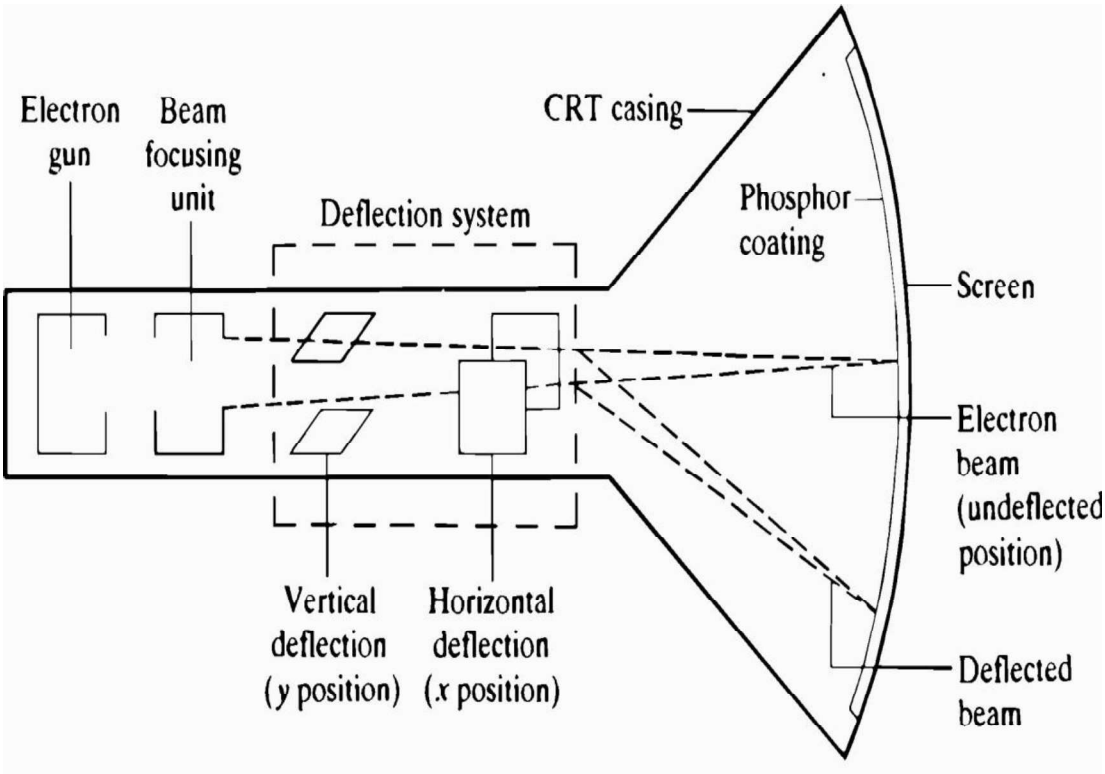

FIGURE Diagram of cathode ray tube (CRT).

The stroke-writing system uses an electron beam which operates like a pencil to create a line image on the CRT screen. The image is constructed out of a sequence of straight-line segments. Each line segment is drawn on the screen by directing the beam to move from one point on the screen to the next, where each point is defined by its x and y coordinates. The process is portrayed in Figure . Although the procedure results in images composed of only straight lines, smooth curves can be approximated by making the connecting line segments short enough.

In the raster scan approach, the viewing screen is divided into a large number of discrete phosphor picture elements, called pixels. The matrix of pixels constitutes the raster. The number of separate pixels in the raster display might typically range from 256 × 256 (a total of over 65,(OO) to lO24 × lO24 (a total of over l,OOO,OOO points). Each pixel on the screen can be made to glow with a different brightness. Color screens provide for the pixels to have different colors as well as brightness. During operation, an electron beam creates the image by sweeping along a horizontal line on the screen from left to right and energizing the pixels in that line during the sweep. When the sweep of one line is completed, the

electron beam moves to the next line below and proceeds in a fixed pattern as indicated in Figure. After sweeping the entire screen the process is repeated at a rate of 3O to 6O entire scans of the screen per second:

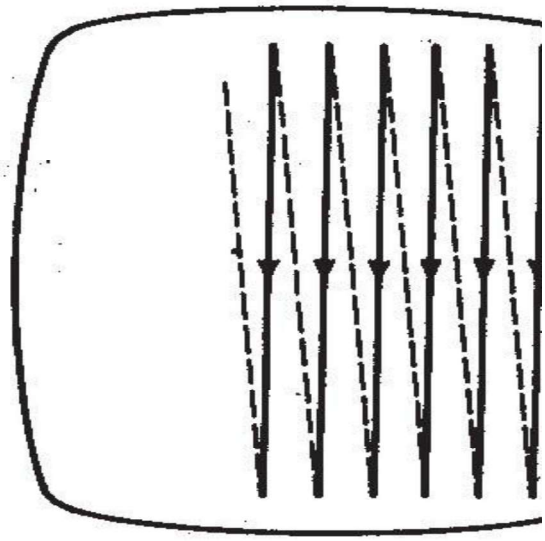

FIGURE Raster scan approach for generating images in computer graphics.

Graphics terminals for computer-aided design

The two approaches described above are used in the overwhelming majority of current-day CAD graphics terminals. There are also a variety of other technical factors which result in different types of graphics terminals. These factors include the type of phosphor coating on the screen, whether color is required, the pixel density, and the amount of computer memory available to generate the picture. We will discuss three types of graphics terminals, which seem to be the most important today in commercially available CAD systems. The three types are:

l. Directed-beam refresh

2. Direct-view storage tube (DVST)

3. Raster scan (digital TV)

The following paragraphs describe the three basic types. We then discuss some of the possible enhancements, such as color and animation.

DIRECTED-BEAM REFRESH. The directed-beam refresh terminal utilizes the stroke-writing approach to generate the image on the CRT screen. The

term refresh in the name refers to the fact that the image must be regenerated many times per second in order to avoid noticeable flicker of the image. The phosphor elements on the screen surface are capable of maintaining their brightness for only a short time (sometimes measured in microseconds). In order for the image to be continued, these picture tubes must be refreshed by causing the directed beam to retrace the image repeatedly. On densely filled screens (very detailed line images or many characters of text), it is difficult to avoid flickering of the image with this process. On the other hand, there are several advantages associated with the directed-beam refresh systems. Because the image is being continually refreshed, selective erasure and alteration of the image is readily accomplished. It is also possible to provide animation of the image with a refresh tube.

The directed-beam refresh system is the oldest of the modem graphics display technologies. Other names sometimes used to identify this system include vector refresh and stroke-writing refresh. Early refresh tubes were very expensive. but the steadily decreasing cost of solid-state circuitry has brought the price of these graphics systems down to a level which is competitive with other types.

DIRECT-VIEW STORAGE TUBE (DVST). DVST terminals also use the stroke-writing approach to generate the image on the CRT screen. The term storage tube refers to the ability of the screen to retain the image which has been projected against it, thus avoiding the need to rewrite the image which has been projected against it, thus avoiding the need to rewrite the image constantly. What makes this possible is the use of an electron flood gun directed at the phosphor coated screen which keeps the phosphor elements illuminated once they have been energized by the stroke-writing electron beam. The resulting image on the CRT screen is flicker-free. Lines may be readily added to the image without concern over their effect on image density or refresh rates. However, the penalty associated with the storage tube is that individual lines cannot be selectively removed from the image.

Storage tubes have historically been the lowest-cost terminals and are capable of displaying large amounts of data, either graphical or textual. Because of these features, there are probably more storage tube terminals in service in industry at the time of this writing than any other graphics display terminal. The principal disadvantage of a storage CRT is that selective erasure is not possible. Instead, if the user wants to change the picture, the change will not be manifested on the screen

until the entire picture is regenerated. Other disadvantages include its lack of color capability, the inability to use a light pen as a data entry, and its lack of animation capability.

RASTER SCAN TERMINALS. Raster scan terminals operate by causing an electron beam to trace a zigzag pattern across the viewing screen, as described earlier. The operation is similar to that of a commercial television set. The difference is that a TV set uses analog signals originally generated by a video camera to construct the image on the CRT screen, while the raster scan ICG terminal uses digital signals generated by a computer. For this reason, the raster scan terminals used in computer graphics are sometimes called digital TVs.

The introduction of the raster scan graphics terminal using a refresh tube had been limited by the cost of computer memory. For example, the simplest and lowest-cost terminal in this category uses only two beam intensity levels, on or off. This means that each pixel in the viewing screen is either illuminated or dark. A picture tube with 256 lines of resolution and 256 addressable points per line to form the image would require 256 × 256 or over 65,OOO bits of storage. Each bit of memory contains the on/off status of the corresponding pixel on the CRT screen. This memory is called the frame buffer or refresh buffer. The picture quality can be improved in two ways: by increasing the pixel density or adding a gray scale (or color). Increasing pixel density for the same size screen means adding more lines of resolution and more addressable points per line. A lO24 × lO24 raster screen would require more than 1 million bits of storage in the frame buffer. A gray scale is accomplished by expanding the number of intensity levels which can be displayed on each pixel. This requires additional bits for each pixel to store the intensity level. Two bits are required for four levels, three bits for eight levels, and so forth. Five or six bits would be needed to achieve an approximation of a continuous gray scale. For a color display, three times as many bits are required to get various intensity levels for each of the three primary colors: red, blue, and green. (We discuss color in the following section.) A raster scan graphics terminal with high resolution and gray scale can require a very large capacity refresh buffer. Until recent developments in memory technology, the cost of this storage capacity was prohibitive for a terminal with good picture quality. The capability to achieve color and animation was not

possible except for very low resolution levels.

TABLE Comparison of Graphics Terminal Features

	Directed-beam refresh	**DVST**	**Raster scan**
Image generation	Stroke writing	Stroke writing	Raster scan
Picture quality	Excellent	Excellent	Moderate to good
Data content	Limited	High	High
Selective erase	Yes	No	Yes
Gray scale	Yes	No	Yes
Color capability	Moderate	No	Yes
Animation capability	Yes	No	Moderate

It is now possible to manufacture digital TV systems for interactive computer graphics at prices which are competitive with the other two types. The advantages of the present raster scan terminals include the feasibility to use low-cost TV monitors, color capability, and the capability for animation of the image. These features, plus the continuing improvements being made in raster scan technology, make it the fastest-growing segment of the graphics display market.

The typical color CRT uses three electron beams and a triad of color dots an the phosphor screen to provide each of the three colors, red, green, and blue. By combining the three colors at different intensity levels, a variety of colors can be created on the screen. It is mare difficult to fabricate a stroke-writing tube which is precise enough far color because of the technical problem of getting the three beams to. converge properly against the screen .

The raster scan approach has superior color graphics capabilities because of the developments which have been made over the years in the color television industry. Color raster scan terminals with lO24 × lO24 resolution are commercially available for computer graphics. The problem in the raster terminals is the memory requirements of the refresh buffer. Each pixel on the viewing screen' may require up to 24 bits of memory in the refresh buffer in order to display the full range of color

tones. When multiplied by the number of pixels in the display screen, this translates into a very large storage buffer.

The capability for animation in computer graphics is limited to display methods in which the image can be quickly redrawn. This limitation excludes the storage tube terminals Both the directed-beam refresh and the raster scan systems are capable of animation. However, this capability is not automatically acquired .with these systems. It must be accomplished by means of a powerful and fast CPU interfaced to the graphics terminal to process the large volumes of data required for animated images In computer-aided design, animation would be a powerful feature in applications where kinematic simulation is required. The analysis of linkage mechanisms and other mechanical behavior would be examples. In computer-aided manufacturing, the planning of a robotic work cycle would be improved through the use of an animated image of the robot simulating the motion of the arm during the cycle. The popular video games marketed by Atari and other manufacturers for use with home TV sets are primitive examples of animation in computer graphics. Animation in these TV games is made possible by sacrificing the quality of the picture. This keeps the price of these games within an affordable range.

OPERATOR INPUT DEVICES

Operator input devices are provided at the graphics workstation to facilitate convenient communication between the user and the system. Workstations generally have several types of input devices to allow the operator to select the various preprogrammed input functions. These functions permit the operator to create or modify an image on the CRT screen or to enter alphanumeric data into the system. This results in a complete part on the CRT screen as well as complete geometric description of the part m the CAD data base.

Different CAG system vendors offer different types of operator input devices. These devices can be divided into three general categories:

l. Cursor control devices

2. Digitizers

3. Alphanumeric and other keyboard terminals

Of the three, cursor control devices and digitizers are both used for graphical interaction with the system. Keyboard terminals are used as input devices for commands and numerical data.

There are two basic types of graphical interaction accomplished by means of cursor control and digitizing:

Creating and positioning new items on the CRT screen

Pointing at or otherwise identifying locations on the screen, usually associated with existing images

Ideally, a graphical input device should lend itself to both of these functions. However, this is difficult to accomplish with a single unit and that is why most workstations have several different input devices.

Cursor control

The cursor normally takes the form of a bright spot on the CRT screen that, indicates where lettering or drawing will occur. The computer is capable of reading the current position of the cursor. Hence the user's capability to control the cursor position allows locational data to be entered into the CAD system data base. A typical example would be for the user to locate the cursor to identify the starting point of a line. Another, more sophisticated case, would be for the user to position the cursor to select an item from a menu of functions displayed on the screen. For instance, the screen might be divided into two sections, one of which is an array of blocks which correspond to operator input functions. The user simply moves the cursor to the desired block to execute the particular function.

There are a variety of cursor control devices which have been employed in CAD systems. These include:

Thumbwheels

Direction keys on a keyboard terminal

Joysticks

Tracker ball

Light pen

Electronic tablet/pen

The first four items in the list provide control over the cursor without any direct physical contact of the screen by the user. The last two devices in the list require the user to control the cursor by touching the screen (or some other flat surface which is related to the screen) with a pen-type device.

The thumbwheel device uses two thumbwheels, one to control the horizontal position of the cursor, the other to control the vertical position. This type of device is often mounted as an integral part of the CRT terminal. The cursor in this arrangement is often represented by the intersection of a vertical line and a horizontal line displayed on the CRT screen. The two lines are like crosshairs in a gunsight which span the height and width of the screen.

Direction keys on the keyboard are another basic form of cursor control used not only for graphics terminals but also for CRT terminals without graphics capabilities. Four keys are used for each of the four directions in which the cursor can be moved (right or left, and up or down).

The joystick apparatus is pictured in Figure. It consists of a box with a vertical toggle stick that can be pushed in any direction to cause the cursor to be moved in that direction. The joystick gets its name from the control stick that was used lO old airplanes.

The tracker ball is pictured in Figure. Its operation is similar to that of the joystick except that an operator-controlled ball is rotated to move the cursor in the desired direction on the screen.

The light pen is a pointing device in which the computer seeks to identify

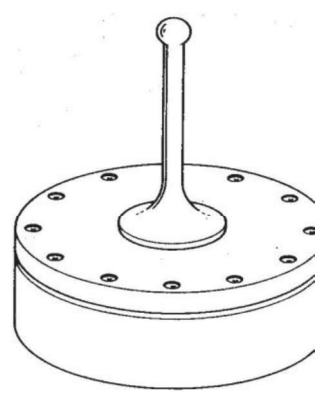

FIGURE Joystick input device for interactive computer graphics

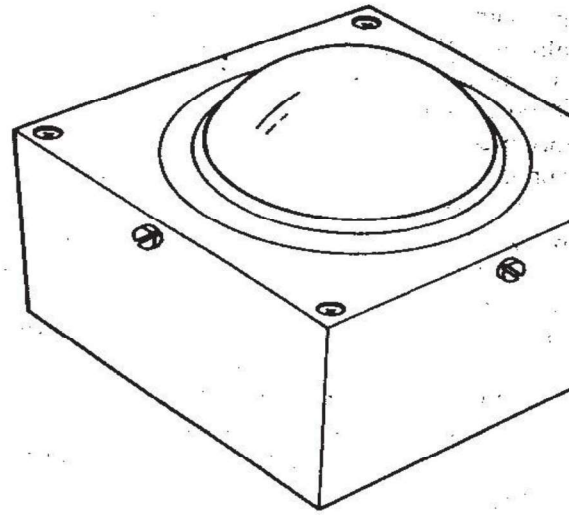

FIGURE Tracker ball input device for interactive computer graphics.

position where the light pen is in contact with the screen. Contrary to what its name suggests, the light pen does not project light. Instead, it is a detector of light on the CRT screen and uses a photodiode, phototransistor, or some other form of light sensor. The light pen can be utilized with a refresh-type CRT but not with a storage tube. This is because the image on the refresh tube is being generated in time sequence. The time sequence is so short that the image appears continuous to the human eye. However, the computer is capable of discerning the time sequence and it coordinates this timing with the position of the pen against the screen. In essence, the system is performing as an optical tracking loop to locate the cursor or to execute some other input function. The tablet and pen in computer graphics describes an electronically sensitive tablet used in conjunction with an electronic stylus. The tablet is a flat surface, separate from the CRT screen, on which the user draws with the penlike stylus to input instructions or to control the cursor

It should be noted that thumbwheels, direction keys, joysticks, and tracker balls are generally limited in their functions to cursor control. The light pen and tablet/pen are typically used for other input functions as well as cursor control. Some of these functions are:

Selecting from a function menu

Drawing on the screen or making strokes on the screen or tablet which indicate what image is to be drawn

Selecting a portion of the screen for enlargement of an existing image

Digitizers

The digitizer is an operator input device which consists of a large, smooth board (the appearance is similar to a mechanical drawing board) and an electronic tracking device which can be moved over the surface to follow existing lines. It is a common technique in CAD systems for taking x, y coordinates from a paper drawing. The electronic tracking device contains a switch for the user to record the desired x and y coordinate positions. The coordinates can be entered into the computer memory or stored on an off-line storage medium such as magnetic tape. High-resolution digitizers, typically with a large board (e.g., 42 in by 6O in.) can provide resolution and accuracy on the order of O.OOl in. It should be mentioned that the electronic tablet and pen, previously discussed as a cursor control device, can be considered to be a small, low-resolution digitizer.

Not all CAD systems would include a digitizer as part of its core of operator input devices. It would be inadequate, for example, in three-dimensional mechanical design work since the digitizer is limited to two dimensions. For two-dimensional drawings, drafters can readily adapt to the digitizer because it is similar to their drafting boards. It can be tilted, raised, or lowered to assume a comfortable position for the drafter.

The digitizer can be used to digitize line drawings. The user can input data from a rough schematic or large layout drawing and edit the drawings to the desired level of accuracy and detail. The digitizer can also be used to freehand a new design with subsequent editing to finalize the drawing.

Keyboard terminals

Several forms of keyboard terminals are available as CAD input devices. The most familiar type is the alphanumeric terminal which is available with nearly all interactive graphics systems. The alphanumeric terminal can be either a CRT or a hard copy terminal, which prints on paper. For graphics, the CRT has the advantage because of its faster speed, the ability to easily edit, and the avoidance of large volumes of paper. On the other hand, a permanent record is sometimes desirable and this is most easily created with a hard-copy terminal. Many CAD systems use the graphics screen to display the alphanumeric data, but there is an advantage in having a separate CRT

terminal so that the alphanumeric messages can be created without disturbing or overwriting the image on the graphics screen.

The alphanumeric terminal is used to enter commands, functions, and supplemental data to the CAD system. This information is displayed for verification on the CRT or typed on paper. The system also communicates back to the user in a similar manner. Menu listings, program listings, error messages, and so forth, can be displayed by the computer as part of the interactive procedure.

These function keyboards are provided to eliminate extensive typing of commands, or calculate coordinate positions, and other functions. The number of function keys varies from about 8 to 8O. The particular function corresponding with each button is generally under computer control so that the button function can be changed as the user proceeds from one phase of the design to the next. In this way the number of alternative functions can easily exceed the number of but tons on the keyboard.

Also, lighted buttons are used on the keyboards to indicate which functions are possible in the current phase of design activity. A menu of the various function alternatives is typically displayed on the CRT screen for the user to select the desired function.

PLOTTERS AND OTHER OUTPUT DEV CES

There are various types of output devices used in conjunction with a computer-aided design system. These output devices include:

Pen plotters

Hard-copy units

Electrostatic plotters Computer-output-to-microfilm (COM) units

We discuss these devices in the following sections.

Pen plotters

The accuracy and quality of the hard-copy plot produced by a pen plotter is considerably greater than the apparent accuracy and quality of the corresponding image on the CRT screen. In the case of the CRT image, the quality of the picture is degraded because of lack of resolution and because of losses in the digital-to-analog conversion through: the display generators. On the other hand, a high-precision pen plotter is capable of achieving a hard-copy drawing whose accuracy is nearly consistent with the digital definitions in the CAD data base.

The pen plotter uses a mechanical ink pen (either wet ink or ballpoint) to write on paper through relative movement of the pen and paper. There are two basic types of pen plotters currently in use:

Drum plotters

Fiat-bed plotters

Hard-copy unit

A hard-copy unit is a machine that can make copies from the same image data layed on the CRT screen. The image on the screen can be duplicated in a matter of seconds. The copies can be used as records of intermediate steps in the design process or when rough hard copies of the screen are needed quickly. The hard copies produced from these units are not suitable as final drawings because the accuracy and quality of the reproduction is not nearly as good as the output of a pen plotter.

Most hard-copy units are dry silver copiers that use light-sensitive paper exposed through a narrow CRT window inside the copier. The window is typically 8½ in. (2l6 mm), corresponding to the width of the paper, by about ½ in. (l2 mm) wide. The paper is exposed by moving it past the window and coordinating the CRT beam to gradually transfer the image. A heated roller inside the copier is used to develop the exposed paper. The size of the paper is usually limited on these hard-copy units to 8½ by II in. Another drawback is that the dry silver copies will darken with time when they are left exposed to normal light.

Electrostatic plotters

Hard-copy units are relatively fast but their accuracy and resolution are poor. Pen plotters are highly accurate but plotting time can take many minutes (up to a half-hour or longer for complicated drawings). The electrostatic plotter offers a compromise between these two types in terms of speed and accuracy. It is almost as fast as the hard-copy unit and almost as accurate as the pen plotter.

The electrostatic copier consists of a series of wire styli mounted on a bar which spans the width of the charge-sensitive paper. The styli have a density of up to 2OO per linear inch. The paper is gradually moved past the bar and certain styli are activated to place dots on the paper. By coordinating the generation of the dots with the paper travel, the image is progressively transferred from the data base into hard- copy

form. The dots overlap each other slightly to achieve continuity. For example, a series of adjacent dots gives the appearance of a continuous line.

A limitation of the electrostatic plotter is that the data must be in the raster format (i.e., in the same format used to drive the raster-type CRT) in order to be readily converted into hard copy using the electrostatic method. If the data are not in raster format, some type of conversion is required to change them into the required format. The conversion mechanism is usually based on a combination of software and hardware.

An advantage of the electrostatic plotter which is shared with the drum-type pen plotter is that the length of the paper is virtually unlimited. Typical plotting widths might be up to 6 ft (l.83 m). Another advantage is that the electrostatic plotter can be utilized as a high-speed line printer, capable of up to l2OO lines of text per minute.

Memory Types

- ROM - Read only memory
- PROM - Programmable ROM
- EPROM - Erasable programmable ROM
- EEPROM - Electrically erasable and programmable ROM
- RAM - Random access memory
- Flash memory

- MemorySpeedComparison
-

DRAM Memory Type	Typical Page-Mode Cycle Time, ns	Typical Page-Mode Cycle Frequency, MHz
Fast-page mode (FPM)	35	28.5
Extended-data out (EDO)	25	40.0
SDRAM (66 MHz)	15	66.0
SDRAM (100 MHz)	10	100.0

THE CENTRAL PROCESSING UNIT

The CPU operates as the central "brain" of the computer-aided design system. It is typically a minicomputer. It executes all the mathematical computations needed to accomplish graphics and other functions, and it directs the various activities within the system.

COMPUTER GRAPHICS SOFTWARE AND DATA BASE

INTRODUCTION

The graphics software is the collection of programs written to make it convenient for a user to operate the computer graphics system. It includes Programmes to generate images on the CRT screen, to manipulate the images, and to accomplish various types of interaction between the user and the system. In addition to the graphics software, there may be additional programs for implementing certain specialized functions related to CAD/CAM. These include design analysis programs(e.g., finite-element analysis and kinematic simulation) and Manufacturing planning programs (e.g., automated process planning and numerical control part programming). This chapter deals mainly with the graphics software.

The graphics software for a particular computer graphics system is very much a function of the type of hardware used in the system. The software must be written specifically for the type of CRT and the types of input devices used in the system. The details of the software for a stroke-writing CRT would be different than for a raster scan CRT. The differences between a storage tube and a refresh tube would also influence the graphics software. Although these differences in software may be invisible to the user to some extent, they are important considerations in the design of an interactive computer graphics system.

Newman and Spoull list six ground rules that should be considered in designing graphics software:

1. Simplicity. The graphics software should be easy to use.

2. Consistency . The package should operate in a consistent and predictable way to the user.

3. Completeness. There should be no inconvenient omissions in the set of graphics functions.

4. Robustness. The graphics system should be tolerant of minor instances of misuse by the operator.

5. Performance. Within limitations imposed by the system hardware, the performance should be exploited as much as possible by software. Graphics programs should be efficient and speed of response should be fast and consistent.

6. Economy. Graphics programs should not be so large or expensive as to make their use prohibitive.

THE SOFTWARE CONFIGURATION OF A GRAPHICS SYSTEM

In the operation of the graphics system by the user, a variety of activities take place, which can be divided into three categories:

l. Interact with the graphics terminal to create and alter images on the screen

2. Construct a model of something physical out of the images on the screen. the models are sometimes called application models.

3. Enter the model into computer memory and/or secondary storage.

In working with the graphics system the user performs these various activities in combination rather than sequentially. The user constructs a physical model and inputs it to memory by interactively describing images to the system. This is done without any thought about whether the activity falls into category l, 2, or 3.

The reason for separating these activities in this fashion is that they correspond to the general configuration of the software package used with the interactive computer graphics (ICG) system. The graphics software can be divided into three modules according to a conceptual model suggested by Foley and Van Dam:

l. The graphics package (Foley and Van Dam called this the graphics system)

2. The application program

3. The application data base

This software configuration is illustrated in Figure. The central module is the application program. It controls the storage of data into and retrieves data out of the application data base. The application program is driven by the user through the graphics package.

The application program is implemented by the user to construct the model of a physical entity whose image 'is to be viewed on the graphics-screen. Application programs are written for particular problem areas. Problem areas in engineering design would include architecture, construction, mechanical components, electronics, chemical engineering, and aerospace engineering. Problem areas other than design would include flight simulators, graphical display of data, mathematical analysis, and even artwork. In each case, the application software is developed to deal with images and conventions which are appropriate for that field.

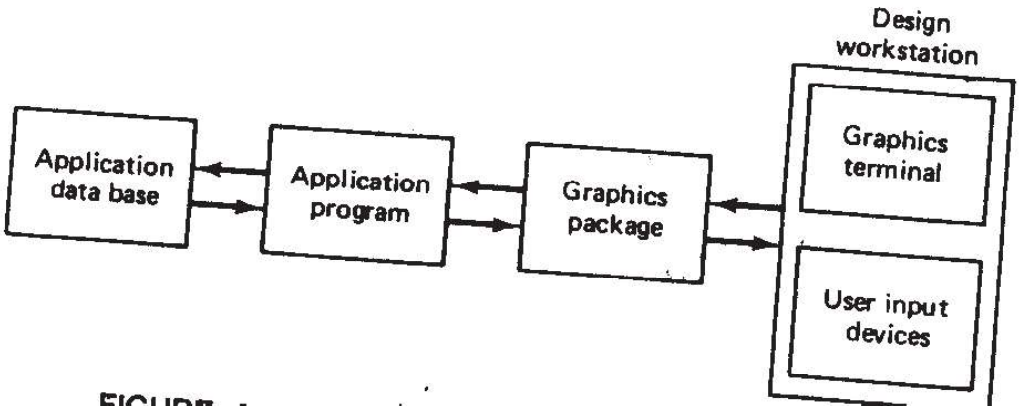

The graphics package is the software support between the user and the graphics terminal. It manages the graphical interaction between the user and the system. It also serves as the interface between the user and the application software. The graphics package consists of input subroutines and output subroutines. The input

routines accept input commands and data from the user and forward them to the application program. The output subroutines control the display terminal (or other output device) and converts the application models into two-dimensional or three- dimensional graphical pictures.

The third module in the ICG software is the data base. The data base contains mathematical, numerical, and logical definitions of the application models, such as electronic circuits, mechanical components, automobile bodies, and so forth. It also includes alphanumeric information associated with the models, such as bills of materials, mass properties, and other data. The contents of the data base can be

readily displayed on the CRT or plotted out in hard-copy form.
Section

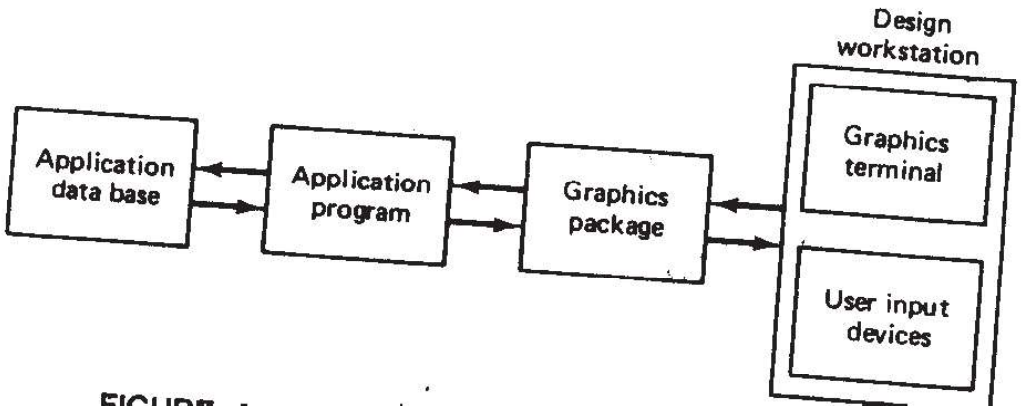

FIGURE Model of graphics software configuration .

FUNCTIONS OF A GRAPHICS PACKAGE

To fulfill its role in the software configuration, the graphics package must perform a variety of different functions. these functions can be grouped into function sets. Each set accomplishes a certain kind of interaction between the user and the system. Some of the common function sets are:

Generation of graphic elements

Transformations

Display control and windowing functions

Segmenting functions

User input functions

TRANSFORMATIONS

Many of the editing features involve transformations of the graphics elements or cells composed of elements or even the entire model. In this section we

discuss the mathematics of these transformations. Two-dimensional transformations are considered first to illustrate concepts. Then we deal with three dimensions.

Two-dimensional transformations

To locate a point in a two-axis cartesian system, the x and y coordinates are specified. These coordinates can be treated together as a lxl matrix: (*x,y*). For example, the matrix (2, 5) would be interpreted to be a point which is 2 units from the origin in the x-direction and 5 units from the origin in the y-direction.

This method of representation can be conveniently extended to define a line as a 2 x 2 matrix by giving the x and y coordinates of the two end points of the line. The notation would be

$$L = \begin{matrix} x_1 & y_1 \\ x_2 & y_2 \end{matrix}$$

Using the rules of matrix algebra, a point or line (or other geometric element represented in matrix notation) can be operated on by a transformation matrix to yield a new element.

There are several common transformations used in computer graphics. We will discuss three transformations: translation, scaling, and rotation.

TRANSLATION. Translation involves moving the element from one location to another. In the case of a point, the operation would be

$$x' = x + m, \qquad y' = y + n$$

where x', y' = coordinates of the translated point

x, y = coordinates of the original point

m, n = movements in the x and y directions, respectively

In matrix notation this can be represented as

$$(x', y') = (x, y) + T$$

where

T = (m,n), the translation matrix

Any geometric element can be translated in space by applying Eq. to each point that defines the element. For a line, the transformation matrix would be applied to its two end points.

SCALING. Scaling of an element is used to enlarge it or reduce its size. The scaling need not necessarily be done equally in the x and y directions. For example, a circle could be transformed into an ellipse by using unequal x and y scaling factors.

The points of an element can be scaled by the scaling matrix as follows:

(x' ,y') = (x,y)S
where

$$s \quad \begin{matrix} m & O \\ O & n \end{matrix} \qquad \text{the scaling matrix}$$

This would produce an alteration in the size of the element by the factor m in the x-direction and by the factor n in the y direction. It also has the effect of repositioning the element with respect to the cartesian system origin. If the scaling factors are less than I, the size of the element is reduced and it is moved closer to the origin. If the scaling factors are larger than I, the element is enlarged and removed farther from the origin.

ROTATION. In this transformation, the points of an object are rotated about the origin by an angle O. For a positive angle, this rotation is in the counterclockwise direction. This accomplishes rotation of the object by the same angle, but it also moves the object. In matrix notation, the procedure would be as follows:

(x',y') = (x,y)R
where

$$R = \begin{matrix} \cos O & \sin O \\ \sin O & \cos O \end{matrix} \qquad \text{the rotation matrix}$$

EXAMPLE 6.1

As an illustration of these transformations in two dimensions, consider the line defined by

$$L = \begin{matrix} 1 & 1 \\ 2 & 4 \end{matrix}$$

Let us suppose that it is desired to translate the line in space by 2 units in the x direction and 3 units in the y direction. This would involve adding 2 to the current x value and 3 to the current y value of the end points defining the line. That is,

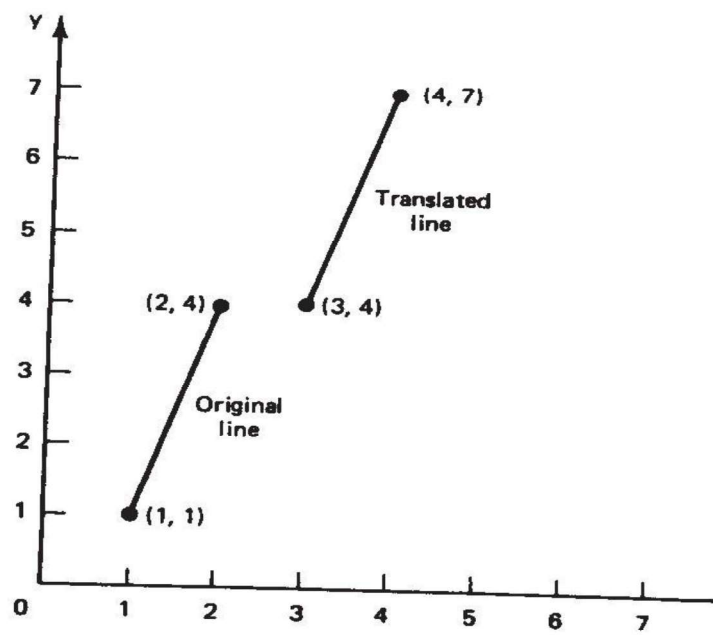

FIGURE. Results of translation in Example 6.l.

$$\begin{matrix} 1 & 1 & 2 & 3 & 3 & 4 \\ 2 & 4 & 2 & 3 & 4 & 7 \end{matrix}$$

The new line would have end points at (3, 4) and (4, 7). The effect of the transformation is illustrated in Figure 6.3.

EXAMPLE

For the same original line as in Example 6.l, let us apply the scaling factor of 2 to the line. The scaling matrix for the 2 x 2 line definition would therefore be

$$T = \begin{matrix} 2 & O \\ O & 2 \end{matrix}$$

The resulting line would be determined by Eq. as follows:

$$\begin{matrix} 1 & 1 & 2 & O & 2 & 4 \\ 2 & 4 & O & 2 & 4 & 8 \end{matrix}$$

The new line is pictured in Figure .

EXAMPLE

We will again use our same line and rotate the line about the origin by 3O°. Equation would be used to determine the transformed line where the rotation matrix would be:

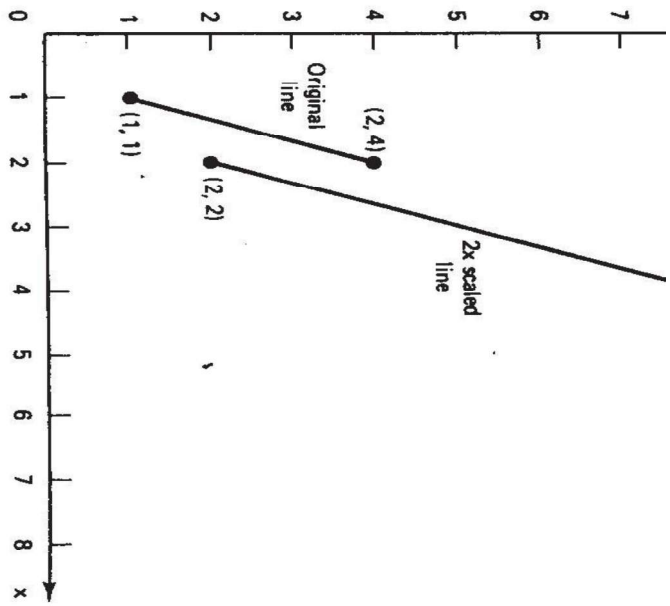

FigureResults of scaling in Example .

$$R = \begin{matrix} \cos 3O & \sin 3O \\ \sin 3O & \cos 3O \end{matrix} \quad \begin{matrix} O.866 & O.5OO \\ O.5OO & O.866 \end{matrix}$$

The new line would be defined as:

1 1 O.866O.5OO O.366 l.366
2 4 O.5OO.866 O.268 4.464

The effect of applying the rotation matrix to the line is shown in Figure.

Three-dimensional transformations

Transformations by matrix methods can be extended to three-dimensional space. We consider the same three general categories defined in the preceding section. The same general procedures are applied to use these transformations that were defined for the three cases by Eqs. TRANSLATION. The translation matrix for a point defined in three dimensions would be

T = (m. n, p)

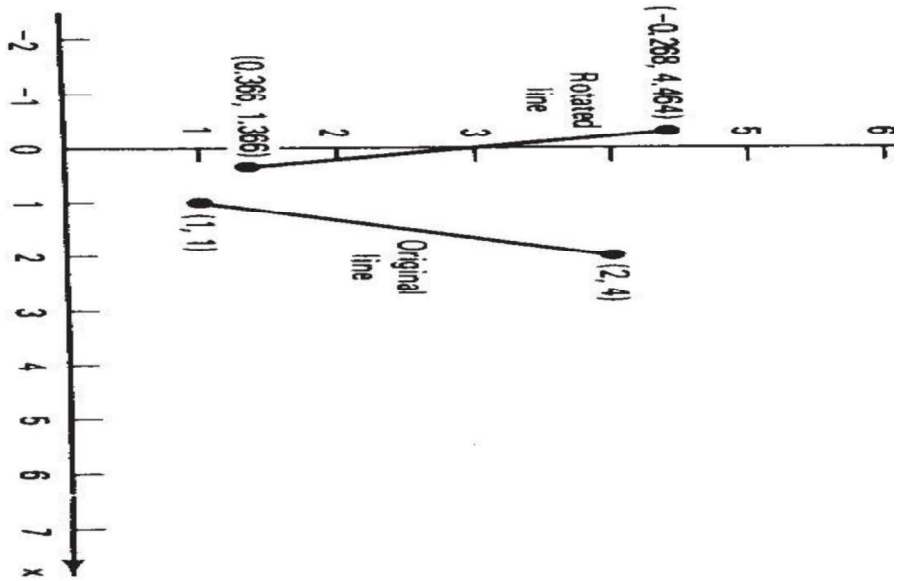

FIGURE Results of rotation in Example

and would be applied by adding the increments m, n, and p to the respective coordinates of each of the points defining the three-dimensional geometry element.

SCALING. The scaling transformation is given by

$$S = \begin{matrix} m & O & O \\ O & n & O \\ 0 & 0 & p \end{matrix}$$

For equal values of m, n, and p, the scaling is linear.

ROTATION. Rotation in three dimensions can be defined for each of the axes.

Rotation about the z axis by an angle is accomplished by the matrix

$$R_z = \begin{matrix} \cos & \sin & O \\ \sin & \cos & O \\ 0 & 0 & 1 \end{matrix}$$

Rotation about the y axis by the angle 6 is accomplished similarly.

$$R_y = \begin{matrix} \cos & 0 & \sin \\ O & 1 & O \\ \sin & 0 & \cos \end{matrix}$$

Rotation about the x axis by the angle is done with an analogous transformation matrix.

$$R_x = \begin{matrix} 1 & O & O \\ O & \cos & \sin \\ 0 & \sin & \cos \end{matrix}$$

Concatenation

The previous single transformations can be combined as a sequence of transformations. This is called concatenation, and the combined transformations are called concatenated transformations.

During the editing process when a graphic model is being developed. the use of concatenated transformations is quite common. It would be unusual that only a single transformation would be needed to accomplish a desired manipulation of the image. Two examples of where combinations of transformations would be required would be: -

Rotation of the element about an arbitrary point in the element

Magnifying the element but maintaining the location of one of its points in the same location

In the first case, the sequence of transformations would be' translation to the origin, then rotation about the origin, then translation back to the original location. In the second case, the element would be scaled (magnified) followed by a translation to locate the desired point as needed:-

The objective of concatenation is to accomplish a series of image manipulations as a single-transformation. This allows the concatenated transformation to be defined more concisely and the computation can generally be accomplished more efficiently.

Determining the concatenation of a sequence of single transformations can be fairly straightforward if the transformations are expressed in matrix form as we have done. For example. if we wanted to scale a point by the factor of 2 in a two dimensional system and then rotate it about the origin by 45°, the concatenation would simply be the product of the two transformation matrices. It is important that the order of matrix multiplication be the same as the order in which the transformations are to be carried out. Concatenation of a series of transformations becomes more complicated when a translation is involved, and we will not consider this case.

WIRE-FRAME VERSUS SOLID MODELING

The importance of three-dimensional geometry

Early CAD systems were basically automated drafting board systems which displayed a two-dimensional representation of the object being designed. Operators (e.g., the designer or drafter) could use these graphics systems to develop the line drawing the way they wanted it and then obtain a very high quality paper plot of the drawing. By using these systems, the drafting process could be accomplished in less time, and the productivity of the designers could be improved.

However, there was a fundamental shortcoming of these early systems. Although they were able to reproduce high-quality engineering drawings efficiently and quickly, these systems stored in their data files a two-dimensional record of the drawings. The drawings were usually of three-dimensional objects and it was left to the human beings who read these drawings to interpret the three-dimensional shape from the two-dimensional representation. The early CAD systems were not capable

of interpreting the three-dimensionality of the object. It was left to the user of the system to make certain that the two-dimensional representation was correct (e.g., hidden lines removed or dashed, etc.), as stored in the data files.

More recent computer-aided design systems possess the capability to define objects in three dimensions. This is a powerful feature because it allows the designer to develop a full three-dimensional model of an object in the computer rather than a two-dimensional illustration. The computer can then generate the orthogonal views, perspective drawings, and close-ups of details in the object.

The importance of this three-dimensional capability in interactive computer graphics should not be underestimated.

Wire-Frame models

Most current day graphics systems use a form of modeling called wire-frame modeling. In the construction of the wire-frame model the edges of the objects are shown as lines. For objects in which there are curved surfaces, contour lines can be added; as shown in Figure, to indicate the contour. The image assumes the appearance of a frame constructed out of wire - hence the name wire frame model.

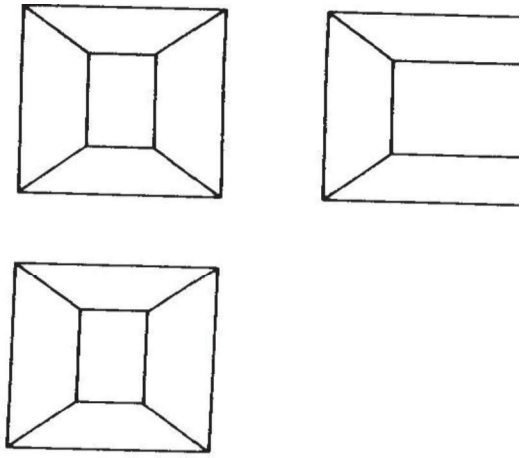

FIGURE Orthographic views of three-dimensional object without hidden- line removal.

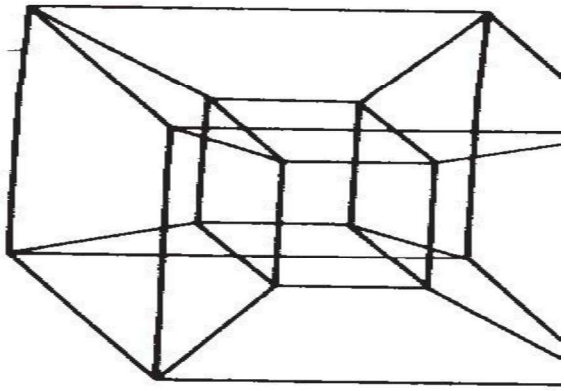

FIGURE Perspective view of three-dimensional object of Figure without hidden line removal.

There are limitations to the models which use the wire-frame approach to form the image. These limitations are, of course, especially pronounced in the case of three-dimensional objects. In many cases, wire-frame models are quite adequate for two-dimensional representation. The most conspicuous limitation is that all of the lines that define the edges (and contoured surfaces) of the model are shown in the image. Many three-dimensional wire-frame systems in use today do not possess an automatic hidden-line removal feature. Consequently, the lines that indicate the edges at the rear of the model show right through the foreground surfaces. This can cause the image to be somewhat confusing to the viewer, and in some cases the image might be interpretable in several different ways. This interpretation problem can be alleviated to some extent through human intervention in removing the hidden background lines in the image.

There are also limitations with the wire-frame models in the way many CAD systems define the model in their data bases. For example, there might be ambiguity in the case of a surface definition as to which side of the surface is solid. This type of limitation prevents the computer system from achieving a comprehensive and unambiguous definition of the object.

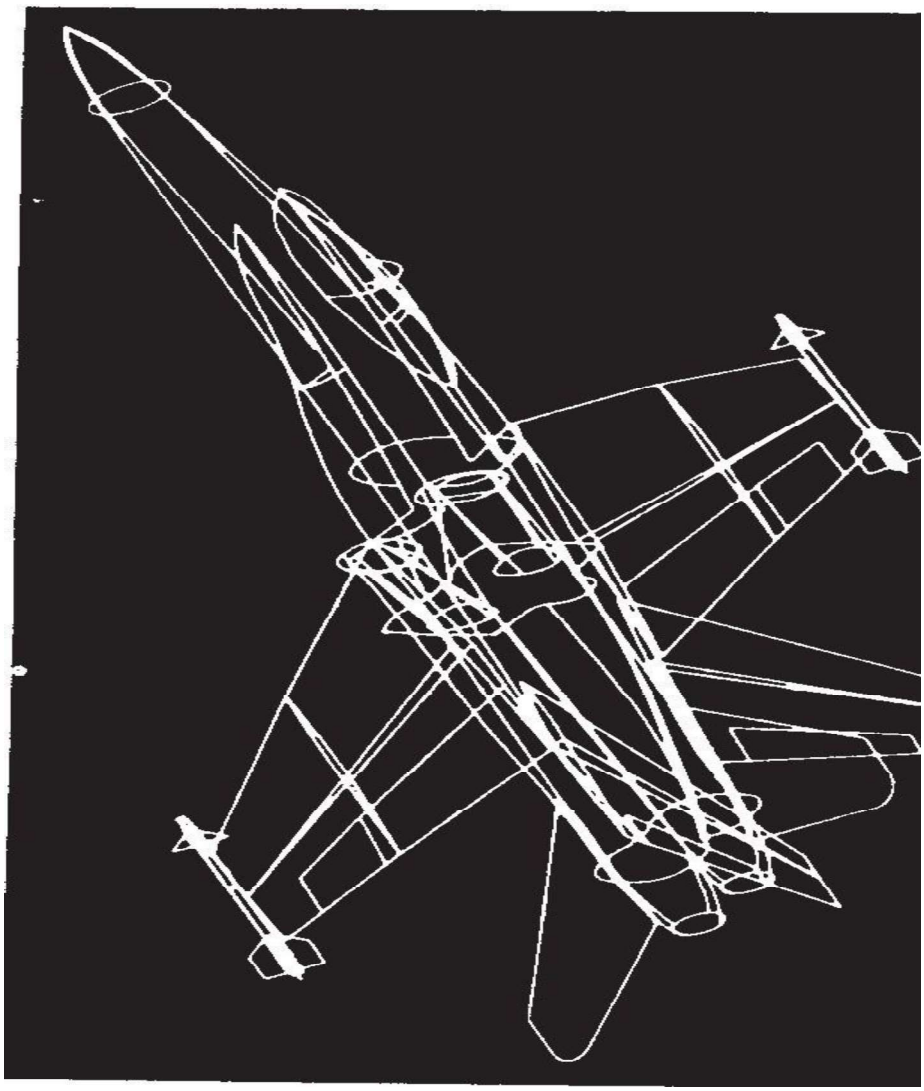

FIGURE Wireframe model of F/A-l8 fighter aircraft, showing primary control curves.

Solid models

An improvement over wire-frame models, both in terms of realism to the user and definition to the computer, is the solid modeling approach. In this approach, the models are displayed as solid objects to the viewer, with very little risk of misinterpretation. When color is added to the image, the resulting picture becomes strikingly realistic. It is anticipated that graphics systems with this capability will find a wide range of applications outside computer-aided design and manufacturing. These applications will include' color illustrations in magazines and technical

publications, animation in movie films, and training simulators (e.g., aircraft pilot training).

There are two factors which promote future widespread use of solid modelers (i.e., graphics systems with the capability for solid modeling). The first is the increasing awareness among users of the limitations of wire-frame systems. As powerful as today's wire-frame-based CAD systems have become, solid model systems represent a dramatic improvement in graphics technology. The second reason is the continuing development of computer hardware and software which make solid modeling possible. Solid modelers require a great deal of computational power, in terms of both speed and memory, in order to operate. The advent of powerful, low-cost minicomputers has supplied the needed capacity to meet this requirement. Developments in software will provide application programs which take advantage of the opportunities offered by solid modelers. Among the possibilities are more highly automated model building and design systems, more complete three-dimensional engineering analysis of the models, including interference checking, automated manufacturing planning, and more realistic production simulation models.

Two basic approaches to the problem of solid modeling have been developed:

l. Constructive solid geometry (CSG or C-rep), also called the building-block approach

2. Boundary representation (B-rep)

The CSG systems allow the user to build the model out of solid graphic primitives, such as rectangular blocks, cubes, spheres, cylinders, and pyramids. This building-block approach is similar to the methods described in Section 6.4 except that a solid three-dimensional representation of the object is produced. The most common method of structuring the solid model in the graphics data base is to use Boolean operations, described in the preceding section and pictured in Figure.

The boundary representation approach requires the user to draw the outline or boundary of the object on the CRT screen using an electronic tablet and pen or analogous procedure. The user would sketch the various views of the object (front, side, and top, more views if needed), drawing interconnecting lines among the views to establish their relationship. Various transformations and other specialized editing procedures are used to refine the model to the desired shape. The general scheme is illustrated in Figure

The two approaches have their relative advantages and disadvantages. The C-rep systems usually have a significant procedural advantage in the initial formulation of the model. It is relatively easy to construct a precise solid model out of regular solid primitives by adding, subtracting, and intersecting the components. The building-block approach also results in a more compact file of the model in the

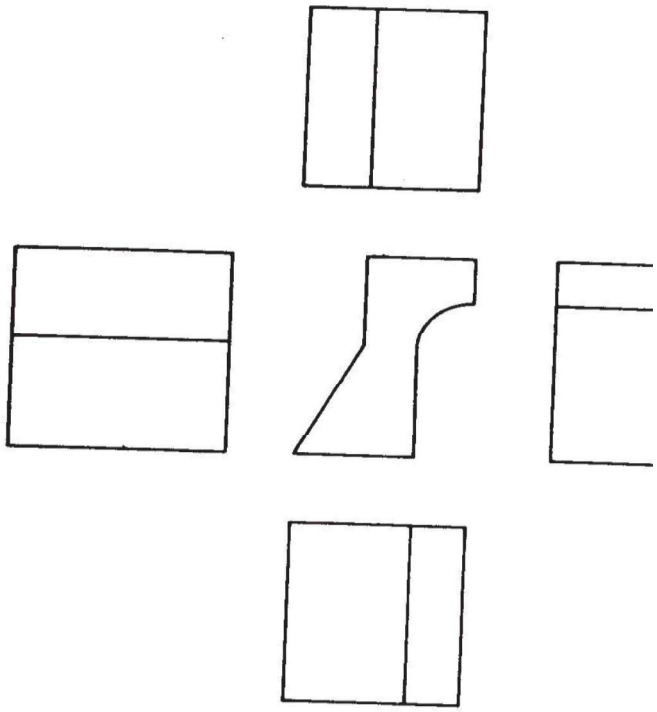

database.

FIGURE Input views of the types required for boundary representation (B-rep) .

.

On the other hand, B-rep systems have their relative advantages. One of them becomes evident when unusual shapes are encountered that would not be included within the available repertoire of the CSG systems. This kind of situation is exemplified by aircraft fuselage and wing shapes and by automobile body styling. Such shapes would be quite difficult to develop with the building-block approach, but the boundary representation method is very feasible for this sort of problem.

Another point of comparison between the two approaches is the difference in the way the model is stored in the data base for the two systems. The CSG approach stores the model by a combination of data and logical procedures.

(the Boolean model). This generally requires less storage but more computation to reproduce the model and its image. By contrast, the B-rep system stores an explicit definition of the model boundaries. This requires more storage space but does not necessitate nearly the same computation effort to reconstruct the image. A related benefit of the B-rep systems is that it is relatively simple to convert back and forth between a boundary representation and a corresponding wire-frame model. The reason is that the model's boundary definition is similar to the wire-frame definition, which facilitates conversion of one form to the other. This makes the newer solid B-rep systems compatible with existing CAD systems out in the field.

Because of the relative benefits and weaknesses of the two approaches, hybrid systems have been developed which combine the CSG and B-rep approaches. With these systems, users have the capability to construct the geometric model by either approach, whichever is more appropriate to the particular problem.

Vector Generation

- The process of _turning on‘ the pixels.

Two V.G. Algorithm (line grassing)

1. DDA (Digital Differnetial Analysers)

2. Bresenham‘s Algoritm.

DDA Algorithm

- Based on dy of dx

- Floating point Arithmetic , slower

- More accurate.

l. Read the endpoints co-ordinates (x_l, y_l) & (x_2, y_2) for a line

2. dx = x_2 - x

   dy = y_2 –y

3. If abs (dx) > abs (dy) then

   step = abs (dx)

   otherwise

   Step = abs (dy)

4. x inc = dx/step y inc = dy/step x = x_l
   y x = y_l

5. Put pixel (x, y, colourO

6. x = x + x inc

   y = y + y inc

   Put pixel (x,y, colour)

7. Repeat step 6 until x = x_2

   Draw line from (l,2) to (4,6) using DDA Algorithm.

l. x_1 = 1 y_1 = 2

   x_2 = 4 y_2 = 5

2. dx = 3 dy = 4

3. Step = dt = 4

4. X inc = dx = 3 = O.75

Step 4

5. Plot (l_1 2)

6. x = x + x inc x = 1 y = 2

y = y + y inc x = l.75 y = 3

x = 2.5 y = 4

x = 3.25 y = 5
x = 4 y = 6

7. Stop

[Rounded to higher value]

- Eliminating stair casing or aliasing is known as ant aliasing.

- Uses Integer arithmetic.

- Faster than DDA because of Integer Arithmatic.

- Separate algorithms for |m|<| & |m| ≥ |

$$m = \frac{y_2 - y_1}{x_2 - x_1}$$

for |m|<|

l. Read (x_1, y_1) and (x_2, t_2) as the endpoints co-ordinates.

2. $dx = |x_2 - x_1|$

$dy = |y_2 - y_1|$

P = 2dy – dx (Pdecision parameter)

3. At each xk, along the line, stating at k>o, ---------- follows test.

If $P_k < O$, then next point to plot is $(x_k + l,\ y_k)$ and

$P_{k+l} = P_k + 2\ dy$

Otherwise if b_k next point to plot is $(x_k + l, 3\ y_k + l)$ and

$P_{k+l} = P_k + 2dy - 2dx$

4. Repeat step 3 dx times.

5. Stop.

Q. Scan convert the line end points (lO, 5) and (l5, 9) using Bresenham Algorithm.

$n = y_2 - y_l$ 4

$x_2 - x_l$ 5 <l

$dx = x_2 - x_l = l5 - lO = 5$

$dy = y_2 - y_l = 9 - 5 = 4$ (lO, 5)

$P_o = 2dy - dx = 2x4 - 5 = 3$

Since $P > O$, $x_l = x_O + \mathbf{1} = lO + \mathbf{1} = \mathbf{11}$

$Y_l = x_O + \mathbf{1} = y+l = 6$ (l1,6)

$P_l = P_k + 2dy - 2dx$

$= 3 + 2x4 - 2x5$

$= \mathbf{1}$

Since $P_l > O$, $x_2 = l2$ (l2, 7)

$Y_2 = 7$

$P_2 = \mathbf{1} + 2 \times 4 - 2 \times 5 = -1$

Since $P_2 < O$

$X_3 = 13$

$Y_3 = 7$ (13, 7)

$P_3 = -1 + 2 \times 4 = 7$

$P_3 > O$ (14, 8)
$X_4 = 14$

$Y_4 = 8$

$P_4 > O$

$X_5 = 15$ (15, 9)

$Y_5 = 9$

Stop

For slope $|m| \geq |$

1. Read (x_1, y_1) and (x_2, y_2) as the end points co-ordinates.

2. $dx = |x_2 - x_1|$

   $dy = |y_2 - y_1|$ (P = decision percents)

   $P = 2dx - dy$

3. At each x_k along the line, starting at k = O, portion following test.

   If $P_k < O$, then next point to plot is (x_k, y_k+1) and

   $P_{k+1} = P_k + 2\ dx$

Otherwise, next point to plot is $(x_k + 1, y_k + 1)$ and

   $P_{k+1} = P_k + 2dx - 2dy$

4. Repeat _step 3' dy times or $y_1 = y_2$

5. Stop

UNIT -II
GEOMETRIC MODELING TERMINOLOGY

Geometry
Topology
Spatial addressability

Geometry Vs Topology

For wire frame- geometrical data
For surface model- geometrical data
For solid model- topology and geometry

Geometry is the acual dimensions that defines entities of a object
Geometry is visible to users
The geometry that defines the object shown below
Length of lines L1, L2, L3
Angle between lines
The center point P1 of semi circle

Topology or Combinational structure

It is the connectivity and association of the object entity
It determines relational information between object entities

Topology of object can be stated as below

L1 shares a vertex point with L2 & C1
L2 shares a vertex point with L1 & L3
L3 shares a ertex point with L2 & C1
L1 & L3 do not overlap
P1 lies outside the object

Example for better understanding

a) Same geometry but different topology
b) Same topology but different geometry

Spatial Addresability

A complete geometric data representation of an object is one that enables points in space to be classified relative to the object, if it is inside or outside or on the object

GEOMETRICMODELINGTERMINOLOGY

Geometry
Topology
Spatial addressability

Geometry Vs Topology

For wire frame- geometrical data

For surface model- geometrical data
For solid model- topology and geometry

Geometry is the acual dimensions that defines entities of a object

Geometry is visible to users

The geometry that defines the object shown below

Length of lines L1, L2, L3

Angle between lines

The center point P1 of semi circle

Topology or Combinational structure

It is the connectivity and association of the object entity

It determines relational information between object entities

Topology of object can be stated as below

L1 shares a vertex point with L2 & C1

L2 shares a vertex point with L1 & L3

L3 shares a ertex point with L2 & C1

L1 & L3 do not overlap

P1 lies outside the object

Example for better understanding

c) Same geometry but different topology
d) Same topology but different geometry

Spatial Addresability

A complete geometric data representation of an object is one that enables points in space to be classified relative to the object, if it is inside or outside or on the object Spatial

Addresability

A complete geometric data representation of an object is one that enables points in space to be classified relative to the object, if it is inside or outside or on the object This classification is called spatial addressability

3D modeling	Point location			Spatial addresability
	On object	Inside object	Outside object	
Wire frame				Incapable of handling spatial address
Surface				Incapable of handling spatial address
Solid				Capable of handling spatial address

-

Free form surfaces

These are the surfaces which cannot be defined by any analytical techniques

Ex: Sculpture surface

Surface is controlled by series of control points and boundaries

These are large number of numerical techniques available such as Brazier, Curves, Spline surfaces and NURBS, etc

Classification of surfaces

I. Planar surfaces: a flat 2Dsurface

II. Curved surfaces :

Single curved surfaces :It s a simple curved surface obtained by rotating straight lines around an axis Ex: cylindrical, conical, pyramid surfaces, prisms and

-Double curved surfaces: They are complex surfaces generated by complex curved lines/ surfaces

Ex: Spherical, Torous, Ellipsoid, Parabaloid, Fuselage, Automobiles, etc A ruled surface: constructed by transiting between two or more curves by using linear bending between each section OF SURFACE. Curve fittingmethods

For geometrical modeling curve fitting methods are generally used which are broadly classified as:

Interpolation techniques

Between interpolation & approximation

Interpolation	Best fit/ Approximate
Curve can be made to pass through all the control data points for designing curve and surface	The curve does not pass through all the points for designing curves and surfaces
Actual shape between points depends on degree of polynomial & boundary condition	Used in computer graphics to design curves that look good and aesthetic goal. It can also be used to design free form surfaces, sculptures, surface of automobiles, aerodynamic profile
Used to reconstruct the shape of degitized curved object Ex: cubic spline	These techniques are preferred over interpolation in curve design due to the added flexibility and additional initiative fuel Ex: Bazier curve, B- Spline
Cubic spline & Lagrange interpolation methods used	Regression & least square matrix are used
The shape of curve is affected greatly by manipulating a single data point. The nature of tweaking is unpredictable	It is possible to have local modification by tweaking a single point where the behavior is more predictable

Important properties for designing curves

Control points : data points

1. start from 0 to n
2. total n+1 points
3. Multiple values: parametric formation of a curve allows it to represent multiple valued shapes. A curve is multivalued wrt all coordinate systems
4. Axis of independence: - curves must be independent of coordinate systems

if any point on curve is moved by x0 then the curve rotates x0 but shape does not change.

5. Control :- Global control: moving any control point on curve , this leads o entire curve moves.

Ex:Bazier curve

Local control: moving control point on curve results only that point move on curve.

Ex: B- spline

6. Variation Diminishing properties : Curve should not oscillate widely away from it is defined control pairs.

Ex: Brazier curves.

7. Versactality :depends on the number of control points. Ex: complex curve more control points
8. Order of continuity: Continuity at joints between curves. ex:

c^0, c^1, c^2

Parametric continuity condition

Data points are called control points

To construct a smooth curve that passes through the given data points, various continuity requirements can be specified at the data points to impose various degree of smoothness of the resulting curve.

The order f continuity becomes more important where a complex curve is modeled by several curved segments pieced together end to end.

If each set of curve is described with parametric coordinate functions of the form x=f(u), y=g(u), & l= h(u)

Whereumin$\leq$ u $\leq$ umax

To ensure a smooth transition from one section of segment to the next we can impose the following continuity condition at the joint of connecting points. Therefore,

- Zero order parametric continuity (c0)
- First order parametric continuity (c1)
- Second order parametric continuity (c2)

C0 continuity: zero order parametric continuity describes as c0 continuity means simply that the curves meet i.e. values of x,y,z evaluated t umax of first curve section are equal respectively to the values of x,y,z evaluated at uminfor the next curve section.

C1 continuity: the first order parametric continuity referred as c1 continuity means that the first parametric derivatives (tangent lines/ vectors) of coordinate function is function for two successive curve sections are equal after joining points. Curves are same as the intersection.

First order continuity is often sufficient for digitizing drawings and for some design applications.

C2 continuity: second order parametric continuity c2 continuity means that the both first order and second order parametric derivates of line segment sections (i.e. end points of firs segment sections 2nd order parametric derivatives= start point of 2nd segment, 1st and 2nd order parametric derivatives.) are same at the intersection.

First derivative of parametric equations of segment – end point = first order derivative parametric equation of start point of 2nd segment.

Similarly

End point of 2nd order derivative of 1st segment= start point of 2nd order derivative of 2nd Segment 2nd order continuity is useful for setting approximation path for camera motion for many precisions CAD requirements.

Blending function

When modeling a curve f(x) by using curve segments, we try to represent the curve as a sum of smaller segments Ći(x) called blending function or basis function.

Analytical curves

Analytical curves are defined as those that can be described by analytical equations such as lines, circles and conics.

Analytical curves provide very compact forms to represent shapes and simplify the computation of related properties such as areas and volumes

Analytical curves are not attractive to deal with interactively

Analytical curves are points, lines, arcs and circles, fillets and chambers and also conics like parabola, hyperbola, ellipse, etc.

Synthetic curves

A synthetic curve is defined as that can be described by a set of data points(

control points) such as splines and bazier curves.

Synthetic curves provide designers with greater flexibility and control of curve shapes by changing the positions of control points. Global and local control of a curve is possible.

Synthetic curves are attractive to deal with interactively

Synthetic curves include various types of splines like cubic spline, B- spline, NURBS and Bazier curves.

Curves

A 3D curve is an object in space that the direction only much like a thread

A curve has one degree of freedom. This means that a point on a curve can be moved in only one independent direction

Curve representation: is represented by an equation or group of equations that has only one free variable or parameter (i.e. u)

The x,y,z coordinates of any point on the curve are determined by this free variable or parameter

Mathematically there are 2 types of curve representatons a) Non parameteric form:

- explicit
-implicit

b) Parameteric form:

-analytical

-synthetical

Parametric curve description

A parametric form curve is described by an equation or group of equations that has only one free variable or parameter.

Surface

A surface is a 3D space in an object that has breadth and width much like a piece of cloth

A surface has two degrees of freedom. This means that a point on surface can be moved in 2independent directions

The x,y,z coordinates of any point on the surface are determined by these free variables or parameters(i.e. u & v)

Mathematically there are two types of surface description

Non parametric surface description:	- implicit
	-explicit
Parametric surface description:	-analytical
	-synthetic

PARAMETERIC REPRESENTATION OF SYNTHETIC CURVES

-Analytical curves are insufficient to meet the requirement of mechanical points having complex curve shapes such as

Propeller blades Aircraft wings Ship nuts

Automobile bodies

-The composite require free form or synthetic curve

-Design of curved boundaries and surfaces require curve representations that can be manipulated by changing data points which will create bends and sharp turns in the

shape of the curve

These curves are called Synthetic curve and data points are called control points.

-If curve passes through all the data points it is called as interpolated curve.

-The smoothness of curve is mere important requirement of synthetic curve.

Most popular synthetic curves are

- Hermit cube
- Bezier curve
- B- spline
- NURBS (Non- Uniform Rotation B- Spline)

1) Hermit cube curve (HCC)

- HCC is defined by defining 2position vectors and 2 tangent vectors at data points
- Hermit cube curve is also called as parametric cube curve and cubic spline
- The curve is used to interpolate given data points but not free form curve
- The most commonly used, cubic spline is a 3D planer curve
- It is represented by cubic polynomial
- Several splines can be joined together by imposing slope continuity at the corner points.
- The parametric equation for a cubic spline is given by

  $P\ u = {}^{3}_{=0}\ a\,u$ $\qquad 0<u<1$

  (1)

Where $a_i$are polynomial coefficients and u is the parameter.

Expand (1)

$P(u)= a_0+a_1u+a_2u^2+a_3u^3$

------(2)

If x,y,z are coordinates of P equation be

$X(u) = a_{0x}+a_{1x}u+ a_{2x}u^2+a_{3x}u^3$

$Y(u) = a_{0y}+a_{1y}u+ a_{2x}u^2+a_{3y}u^3$

$Z(u) = a_{0x}+a_{1x}u+ a_{2x}u^2+a_{3z}u^3$

Tangent vector to the curve at any point is obtained by differentiating equation (1) wrt u

Now $P'(u) = {}^{3}_{=0}\ ai.i.u^{i-1}$

Where $0<u<1$

-- (3)

(i) Tangent vector at point P can be defined as

$X'(u)= a_{1x}+ 2a_{2x}u+3a_{3x}u^2$

$Y'(u)= a_{1x}+ 2a_{2x}u+3a_{3y}u^2$

$Z'(u)= a_{1x}+ 2a_{2x}u+3a_{3z}u^2$

The coefficients can be evaluated by applying the boundary conditions at the end points.

Substituting boundary conditions at u=0, u=1 in equation (2) & (3) we get

$P_0= P(0)= a_0$

$P_1 = P(1) = a_0 + a_1 + a_2 + a_3$
$P'_0 = P'(0) = a_1$
$P'_1 = P'(1) = a_1 + 2a_2 + 3a_3$
Solving these equations simultaneously for coefficients, we get
$a_0 = P_0$,
$a_1 = P_0$
$a_2 = 3(P_1 - P_0) - (2P'_0 + P'_1)$

$a_3 = -2(P_1 - P_0) + P'_0 + P'_1$

Parametric Cubic Curves

In order to assure C1 continuity at two extremities, our functions must be of at least degree

$$x = a_x t^3 + b_x t^2 + c_x t + d_x$$

$$y = a_y t^3 + b_y t^2 + c_y t + d_y$$

Here's what a parametric cubic spline function looks like: Alternatively, it can be written in matrix form:

$$\begin{bmatrix} x & y \end{bmatrix} = \begin{bmatrix} t^3 & t^2 & t & 1 \end{bmatrix} \begin{bmatrix} a_x & a_y \\ b_x & b_y \\ c_x & c_y \\ d_x & d_y \end{bmatrix}$$

Solving for Coefficients

An Illustrative Example

Cubic Hermite Splines:

Hermite Specification

The Gradient of The Gradient of a Cubic Spline

$$\begin{bmatrix} \frac{dx}{dt} & \frac{dy}{dt} \end{bmatrix} = \begin{bmatrix} 3t^2 & 2t & 1 & 0 \end{bmatrix} \begin{bmatrix} a_x & a_y \\ b_x & b_y \\ c_x & c_y \\ d_x & d_y \end{bmatrix}$$

The Hermite Specification as a Matrix Equation

$$\begin{bmatrix} x_1 & y_1 \\ x_2 & y_2 \\ \frac{dx_1}{dt} & \frac{dy_1}{dt} \\ \frac{dx_2}{dt} & \frac{dy_2}{dt} \end{bmatrix} = \begin{bmatrix} 0 & 0 & 0 & 1 \\ 1 & 1 & 1 & 1 \\ 0 & 0 & 1 & 0 \\ 3 & 2 & 1 & 0 \end{bmatrix} \begin{bmatrix} a_x & a_y \\ b_x & b_y \\ c_x & c_y \\ d_x & d_y \end{bmatrix}$$

Solve for the Hermite Coefficients

$$\begin{bmatrix} 0 & 0 & 0 & 1 \\ 1 & 1 & 1 & 1 \\ 0 & 0 & 1 & 0 \\ 3 & 2 & 1 & 0 \end{bmatrix}^{-1} \begin{bmatrix} x_1 & y_1 \\ x_2 & y_2 \\ \frac{dx_1}{dt} & \frac{dy_1}{dt} \\ \frac{dx_2}{dt} & \frac{dy_2}{dt} \end{bmatrix} = \begin{bmatrix} a_x & a_y \\ b_x & b_y \\ c_x & c_y \\ d_x & d_y \end{bmatrix}$$

The Hermite Specification as a Matrix Equation

$$\begin{bmatrix} x_1 & y_1 \\ x_2 & y_2 \\ \frac{dx_1}{dt} & \frac{dy_1}{dt} \\ \frac{dx_2}{dt} & \frac{dy_2}{dt} \end{bmatrix} = \begin{bmatrix} 0 & 0 & 0 & 1 \\ 1 & 1 & 1 & 1 \\ 0 & 0 & 1 & 0 \\ 3 & 2 & 1 & 0 \end{bmatrix} \begin{bmatrix} a_x & a_y \\ b_x & b_y \\ c_x & c_y \\ d_x & d_y \end{bmatrix}$$

Spline Basis and Geometry Matrices

$$\underbrace{\begin{bmatrix} 2 & -2 & 1 & 1 \\ -3 & 3 & -2 & -1 \\ 0 & 0 & 1 & 0 \\ 1 & 0 & 0 & 0 \end{bmatrix}}_{\mathbf{M}_{Hermite}} \underbrace{\begin{bmatrix} x_1 & y_1 \\ x_2 & y_2 \\ \frac{dx_1}{dt} & \frac{dy_1}{dt} \\ \frac{dx_2}{dt} & \frac{dy_2}{dt} \end{bmatrix}}_{\mathbf{G}_{Hermite}} = \begin{bmatrix} a_x & a_y \\ b_x & b_y \\ c_x & c_y \\ d_x & d_y \end{bmatrix}$$

Resulting Cubic Hermite Spline Equation

$$[x \quad y] = [t^3 \quad t^2 \quad t \quad 1] \underbrace{\begin{bmatrix} 2 & -2 & 1 & 1 \\ -3 & 3 & -2 & -1 \\ 0 & 0 & 1 & 0 \\ 1 & 0 & 0 & 0 \end{bmatrix}}_{\mathbf{M}_{Hermite}} \underbrace{\begin{bmatrix} x_1 & y_1 \\ x_2 & y_2 \\ \frac{dx_1}{dt} & \frac{dy_1}{dt} \\ \frac{dx_2}{dt} & \frac{dy_2}{dt} \end{bmatrix}}_{\mathbf{G}_{Hermite}}$$

Bézier Curves

Another Spline class that has more intuitive controls

A Cubic Bézier Spine has four control points, two of which are knots.

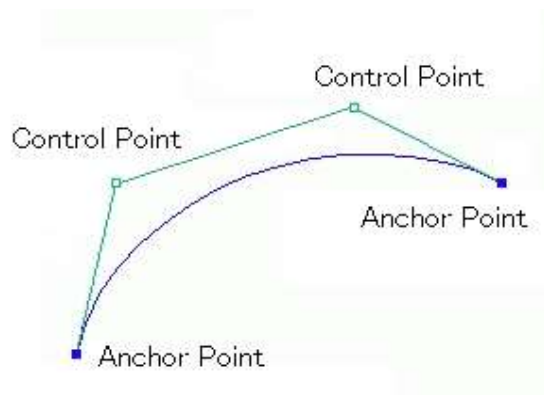

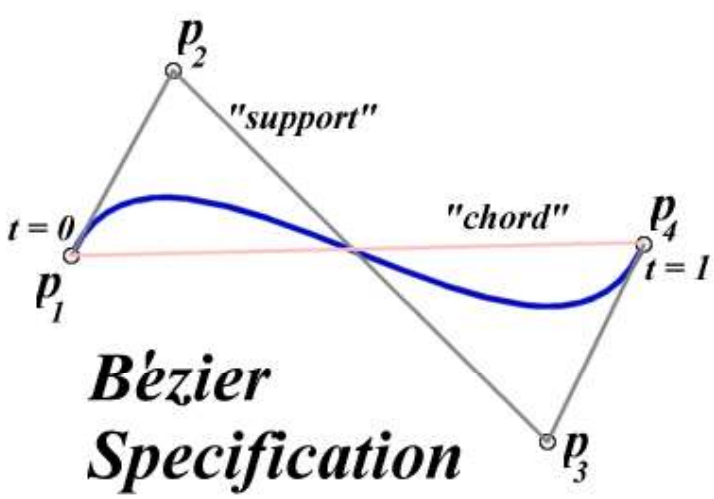

Bezier spline is a way to define a curve by sequence of two end points and one or more control points which control
the curve.
Two end points are called Anchor Points.
The bezier splines with two control points are called Cubic Bezier Spline.

Coefficients for Cubic Bezier Splines

It just so happens that the knot gradients of a Bezier Spline can be expressed in terms of the adjacent control points:

$$\nabla p_1 = 3(p_2 - p_1)$$

$$\nabla p_4 = 3(p_4 - p_3)$$

$$\underbrace{\begin{bmatrix} x_1 & y_1 \\ x_2 & y_2 \\ \frac{dx_1}{dt} & \frac{dy_1}{dt} \\ \frac{dx_2}{dt} & \frac{dy_2}{dt} \end{bmatrix}}_{\mathbf{G}_{Hermite}} = \begin{bmatrix} 1 & 0 & 0 & 0 \\ 0 & 0 & 0 & 1 \\ -3 & 3 & 0 & 0 \\ 0 & 0 & -3 & 3 \end{bmatrix} \underbrace{\begin{bmatrix} x_1 & y_1 \\ x_2 & y_2 \\ x_3 & y_3 \\ x_4 & y_4 \end{bmatrix}}_{\mathbf{G}_{Bezier}}$$

$$\begin{bmatrix} a_x & a_y \\ b_x & b_y \\ c_x & c_y \\ d_x & d_y \end{bmatrix} = \underbrace{\begin{bmatrix} -1 & 3 & -3 & 1 \\ 3 & -6 & 3 & 0 \\ -3 & 3 & 0 & 0 \\ 1 & 0 & 0 & 0 \end{bmatrix}}_{\mathbf{M}_{Bezier}} \underbrace{\begin{bmatrix} x_1 & y_1 \\ x_2 & y_2 \\ x_3 & y_3 \\ x_4 & y_4 \end{bmatrix}}_{\mathbf{G}_{Bezier}}$$

Bezier Blending Functions

The reasonable justification for Bezier spline basis can only be approached by considering its blending functions:

$$p(t) = \begin{bmatrix} (1-t)^3 \\ 3t(1-t)^2 \\ 3t^2(1-t) \\ t^3 \end{bmatrix}^{\mathbf{T}} \begin{bmatrix} p_1 \\ p_2 \\ p_3 \\ p_4 \end{bmatrix}$$

This family of polynomials (called order-3 Bernstein polynomials) have the following unique properties:

They are all positive in the interval [0, 1] Their sum is equal to 1

B-spline Segments

formulation

$Q_i(u) = \sum P_{i-3+}$

i is segment numb

$Q_i(u) = U\ B_S\ [$

$= [u^3\ u^2\ u\ 1]\ 1$

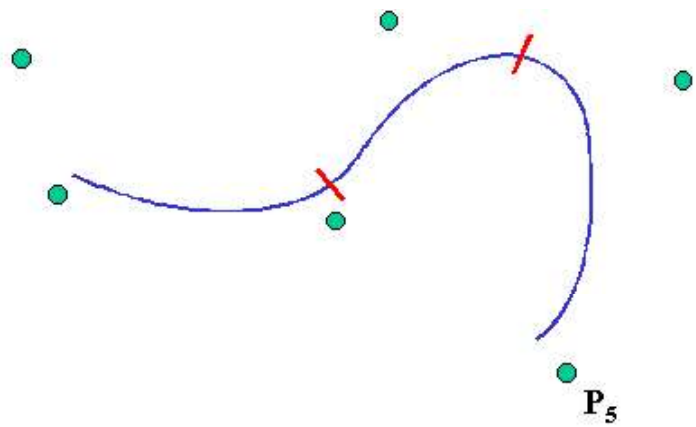

24 October, 2000

B Spline functions

```
Bi(u) = (u^3)/6Bi-1(u) = (-3*(u^3) + 3*(u^2) + 3*u +1)/6
Bi-2(u) = (3*(u^3) - 6*(u^2) +4)/6

Bi-3(u) = (1 - u)^3/6
```

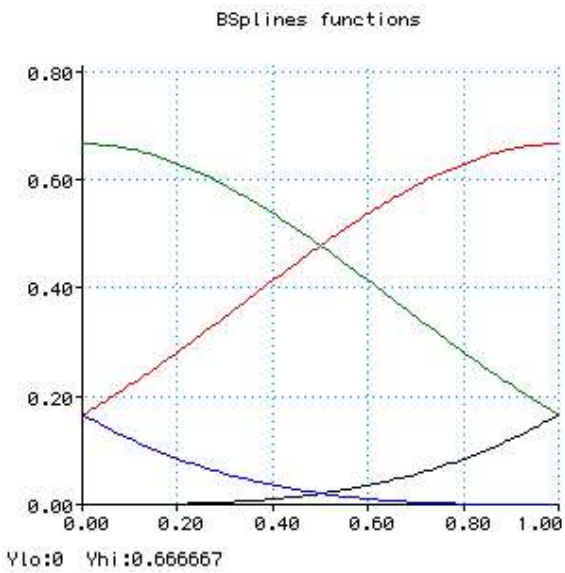


```
Bi(u) = (u^3)/6Bi-1(u) = (-3*((u-1)^3) + 3*((u-1)^2) + 3*(u-1) +1)/6
Bi-2(u) = (3*((u-2)^3) - 6*((u-2)^2) +4)/6
Bi-3(u) = (1 - (u-3))^3/6
```

BSpline function Construction

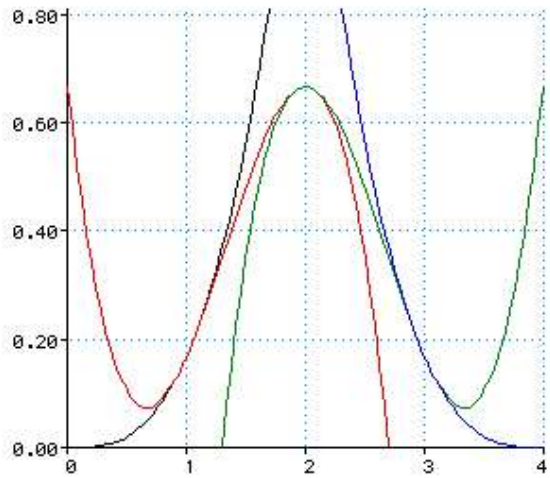

Ylo:-7.33333 Yhi:10.6667

```
Bi(u) = (u^3)/6
Bi-1(u) = (-3*((u-1)^3) + 3*((u-1)^2) + 3*(u-1) +1)/6
Bi-2(u) = (3*((u-2)^3) - 6*((u-2)^2) +4)/6
Bi-3(u) = (1 - (u-3))^3/6

B(u) = Bi(u) when 0 <= u < 1,
       Bi-1(u) when 1 <= u < 2,
       Bi-2(u) when 2 <= u < 3,
       Bi-3(u) when 3 <= u < 4
```

BSplines gaussian

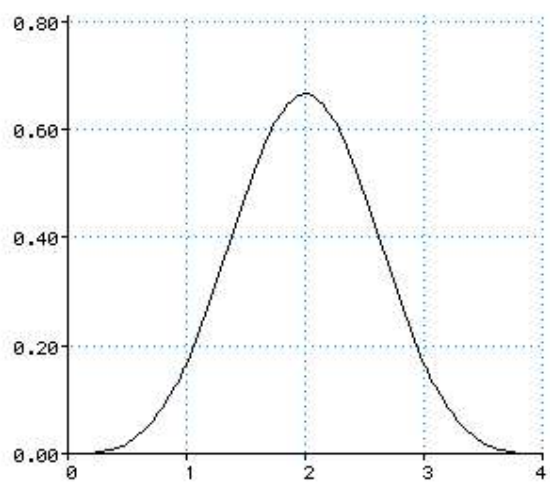

Ylo:0 Yhi:0.666263

```
Bi(u) = (u^3)/6
Bi1(u) = (-3*((u-1)^3) + 3*((u-1)^2) + 3*(u-1) +1)/6
Bi2(u) = (3*((u-2)^3) - 6*((u-2)^2) +4)/6
```

```
Bi3(u) = (1 - (u-3))^3/6


B(u) = Bi(u) when 0 <= u < 1,
       Bi1(u) when 1 <= u < 2,
       Bi2(u) when 2 <= u < 3,
       Bi3(u) when 3 <= u < 4

B1(u) = B(u-1)
B2(u) = B(u-2)
B3(u) = B(u-3)
B4(u) = B(u-4)
```

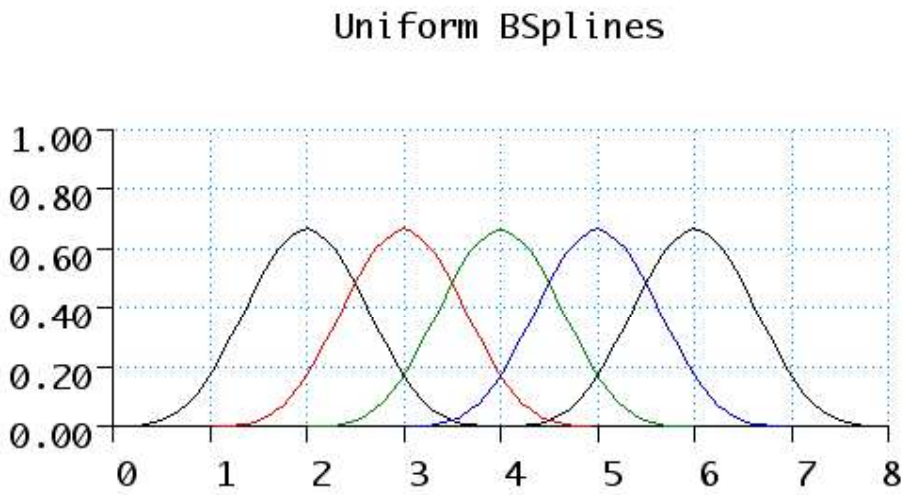

Algebraic and geometric form:

Surface entities:

- Surface entities which are defined by the analytic equation are knows as analytic surface.

- The various type of analytic surfaces, used in surface modeling are discussed below:

- 1) Plane surface 2)Ruled surfaces
  3) Tabulated surface 4) Surface of revolution

Parametric space of surface , subdividing:

A **parametric surface** is a surface in the Euclidean space which is defined by a parametric equation with two parameters Parametric representation is a very general way to specify a surface, as well as implicit representation. Surfaces that occur in two of the main theorems of vector calculus, Stokes' theorem and the divergence theorem, are frequently given in a parametric form. The curvature and arc length of curves on the surface, surface area, differential geometric invariants such as the first and second fundamental forms, Gaussian, mean, and principal curvatures can all be computed from a given parameterization.

We can represent a surface as a series of grid points inside its bounding curves. Surfaces can be in two-dimensional space (planar) or in three-dimensional space (general surfaces). Surface can be described using non-parametric or parametric equations Surfaces can be represented by equations to pass through all the data points (fitting) or have patches of them connected at the data points.

Geometric Shape:

A geometric shape is the geometric information which remains when location, scale, orientation and reflection are removed from the description of a geometric object. That is, the result of moving a shape around, enlarging it, rotating it, or reflecting it in a mirror is the same shape as the original, and not a distinct shape.

Objects that have the same shape as each other are said to be similar. If they also have the same scale as each other, they are said to be congruent.

Many two-dimensional geometric shapes can be defined by a set of points or vertices and lines connecting the points in a closed chain, as well as the resulting interior points. Such shapes are called polygons and include triangles, squares, and pentagons. Other shapes may be bounded by curves such as the circle or the ellipse.

Subdividing:

A **parametric surface** is a **surface** in the Euclidean **space** which is defined by a**parametric** equation with two parameters. **Parametric** representation is a very general way to specify a **surface**, as well as implicit representation.

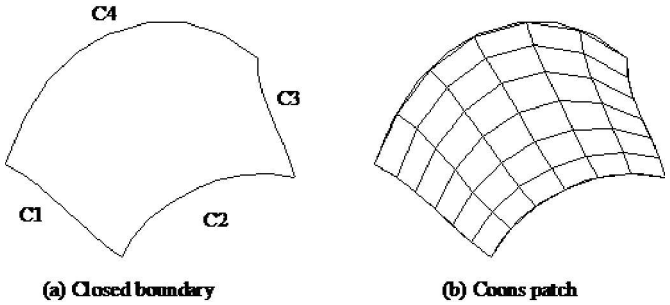

Cylindrical Surface:

A cylindrical surface whose generatrix is parallel to one of the coordinate axes and whose directrix is a curve in the coordinate plane that is perpendicular to the generatrix, has the same equation as the directrix. For example, if the directrix is the ellipse. in the x-y plane, the equation of the cylinder is.

A cylindrical surface whose generatrix is parallel to one of the coordinate axes and whose directrix is a curve in the coordinate plane that is perpendicular to the generatrix, has the same equation as the directrix. For example, if the directrix is the ellipse

$$\frac{x^2}{a^2}+\frac{y^2}{b^2}=1$$

In the x-y plane, the equation of the cylinder is

Cylinder. (1) A cylindrical surface (2) Suppose we are given two parallel planes and two simple closed curves C1 and C2 in these planes for which lines joining corresponding points of C1 and C2 are parallel to a given line L. A cylinder is a closed surface consisting of two bases which are plane regions bounded by such curves C1 and C2 and a lateral surface which is the union of all line segments joining corresponding points of C1 and C2. Each of the curves C1 and C2 is a directrix of the cylinder and the line segments joining corresponding points of C1 and C2 are elements (or generators or rulings). The cylinder is circular or elliptic if a directrix is a circle or an ellipse, respectively. Sometimes a circular cylinder is defined to be a cylinder whose intersections with planes perpendicular to the elements are circles. The cylinder is a right cylinder or an oblique cylinder according as L is perpendicular to the planes or not perpendicular to the planes. The altitude of a cylinder is the perpendicular distance between the planes containing the bases and a right section is the intersection of the cylinder and a plane perpendicular to the elements that crosses the cylinder between the bases.

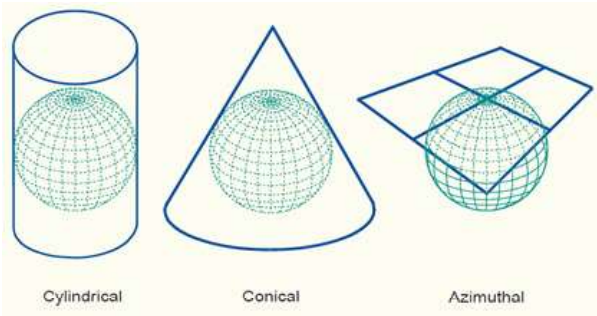

Ruled surface

Ruled Surfaces are surfaces that are generated using two curves with a straight line connecting each curve. The two driving curves can be 3D Curves or existing edges of parts or other surfaces. Ruled Surface, Ruled Surface to Point, and Ruled Surface to Face Examples.

A ruled surface can be described as the set of points swept by a moving straight line. For example, a cone is formed by keeping one point of a line fixed whilst moving another point along a circle. A surface is doubly ruled if through every one of its points there are two distinct lines that lie on the surface.

Ruled (lofted) surface. This is a linear surface. It interpolates linearly between two boundary curves that define the surface (rails). Rails can be any wireframe entity. This entity is ideal to represent surfaces that do not have any twists or kinks.

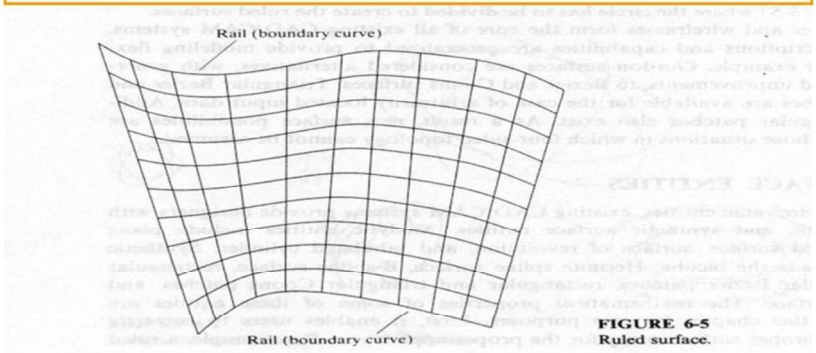

FIGURE 6-5
Ruled surface.

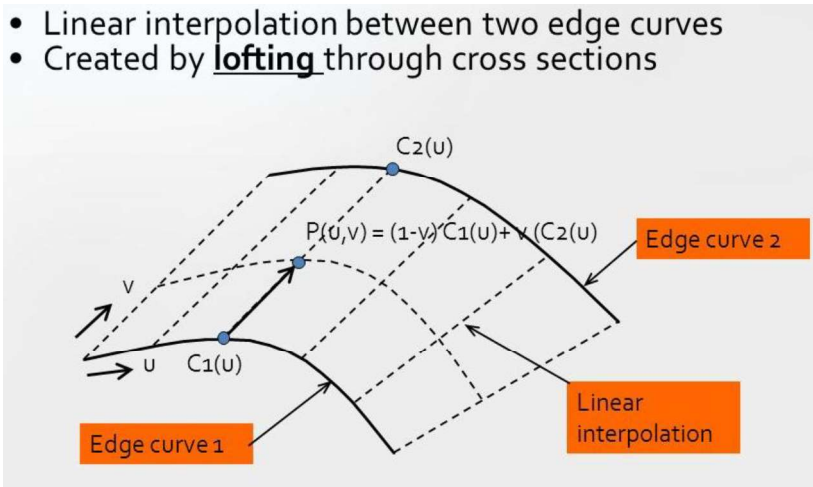

Surface of revolution spherical surface:

A surface of revolution is generated by revolving a given curve about an axis. The given curve is a ***profile curve*** while the axis is the ***axis of revolution.***.

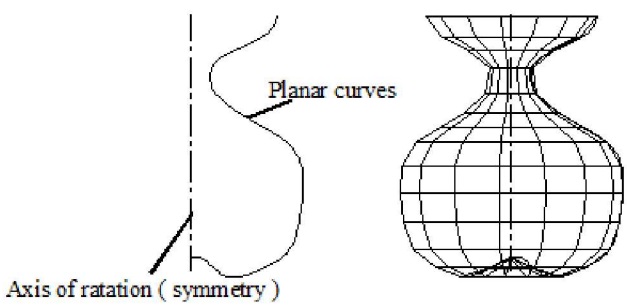

Many commonly seen and useful surfaces are surfaces of revolution (e.g., spheres, cylinders, cones and tori).

Sphere:

A sphere is obtained by revolving a semi-circle about the axis of revolution. In the curve system, this semi-circle must be in the xz-plane and the axis of revolution must be the z-axis.

UNIT III
NUMERICAL CONTROL

Numerical control defined

Numerical control can be defined as a form of programmable automation in which the process is controlled by numbers, letters, and symbol. In NC, the numbers form a program of instructions designed for a particular work part or job. When the job changes, the program of instructions is changed. This capability to change the program for each new job is what gives NC its flexibility. It is much easier to write new programs than to make major changes in the production equipment.

NC technology has been applied to a wide variety of operations, including drafting, assembly, inspection, sheet metal press working, and spot welding. However, numerical control finds its principal applications in metal machining

processes. The machined work parts are designed in various sizes and shapes, and most machined parts produced in industry today are made in small to medium-size batches. To produce each part, a sequence of drilling operations may be required, or a series of turning or milling operations. The suitability of NC for these kinds of jobs is the reason for the tremendous growth of numerical control in the metal-working industry over the last 25 years.

BASIC COMPONENTS OF AN NC SYSTEM

An operational numerical control system consists of the following three basic components:

l. Program of instructions

2. Controller unit, also called a machine control unit (MCU)

3. Machine tool or other controlled process

The general relationship among the three components is illustrated in Figure. The program of instructions serves as the input to the controller unit, which in turn commands the machine tool or other process to be controlled. We will discuss the three components in the sections below.

Program of instructions

The program of instructions is the detailed step-by-step set of directions which tell the machine tool what to do. It is coded in numerical or symbolic form on some type of input medium that can be interpreted by the controller unit. The most common input medium today is l-in.-wide punched tape. Over the years, other formsof input media have been used, including punched cards, magnetic tape, and even 35- mm motion picture film.

There are two other methods of input to the NC system which should be mentioned. The first is by manual entry of instructional data to the controller unit. This method is called manual data input, abbreviated MDI, and is appropriate only for relatively slfuple Jobs where the order will not be repeated. The second other method of input is by means

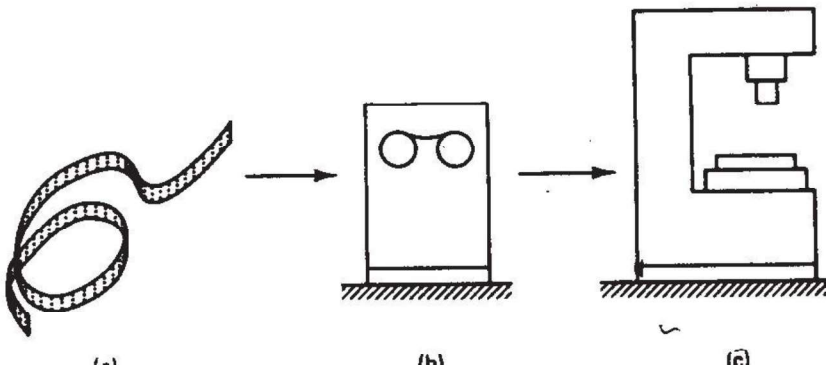

FIGURE Three basic components of a numerical control system: (a) program of instruction; (b) controller unit; (c) machine tool.

of a direct link with a computer. This is called direct numerical control, or DNC,.

The program of instructions is prepared by someone called a part programmer. The programmer's job is to provide a set of detailed instructions by which the sequence of processing steps is to be performed. For a machining operation, the processing steps involve the relative movement between the cutting tool and the workpiece.

Controller unit

The second basic component of the NC system is the controller unit. This

consists of the electronics and hardware that read and interpret the program of instructions and convert it into mechanical actions of the machine tool. The typical elements of a conventional NC controller unit include the tape reader, a data buffer signal out-put channels to the machine tool, feedback channels from the machine tool, and the sequence controls to coordinate the overall operation of the foregoing elements. It should be noted that nearly all modern NC systems today are sold with a microcomputer as the controller unit. This type of NC is called computer numerical control (CNC).

The tape reader is an electromechanical device for winding and reading the punched tape containing the program of instructions. The data contained on the tape are read into the data buffer. The purpose of this device is to store the input instructions in logical blocks of information. A block of information usually represents one complete step in the sequence of processing elements. For example, one block may be the data required to move the machine table to a certain position and drill a hole at that location.

The signal output channels are connected to the servomotors and other controls in the machine tool. Through these channels, the instructions are sent to the machine tool from the controller unit. To make certain that the instructions have been properly executed by the machine, feedback data are sent back to the controller via the feedback channels. The most important function of this return loop is to assure that the table and work part have been properly located with respect to the tool.

Sequence controls coordinate the activities of the other elements of the controller unit. The tape reader is actuated to read data into the buffer from the tape, signals are sent to and from the machine tool, and so on. These types of operations must be synchronized and this is the function of the sequence controls.

Another element NC system, which may be physically part of the controller unit or part of the machine tool, is the control panel. The control panel or control console contains the dials and switches by which the machine operator runs the NC system. It may also contain data displays to provide information to the operator.

Although the NC system is an automatic system, the human operator is still needed to turn the machine on and off, to change tools (some NC systems have automatic tool changers), to load and unload the machine, and to perform various other duties. To be able to discharge these duties, the operator must be able to control the system, and this is done through the control panel.

Machine tool or other controlled process

The third basic component of an NC system is the machine tool or other controlled process. It is the part of the NC system which performs useful work. In the most common example of an NC system, one designed to perform machining operations, the machine tool consists of the workable and spindle as well as the motors and controls necessary to drive them. It also includes the cutting tools, work fixtures, and other auxiliary equipment needed in the machining operation.

NC machines range in complexity from simple tape-controlled drill presses to highly sophisticated and versatile machining centers. The NC machining center was first introduced in the late l95Os. It is a multifunction machine which incorporates several timesaving features into a single piece of automated production equipment. First, a machining center is capable of performing a variety of different operations: drilling, tapping, reaming, milling, and boring. Second, it has the capacity to change tools automatically under tape command. A variety of machining operations means that a variety of cutting tools are required. The tools are kept in a tool drum or other holding device. When the tape calls a particular tool, the drum rotates to position the tool for insertion into the spindle. The automatic tool changer then grasps the tool and places it into the spindle chuck. A third capability of the NC machining center is work piece positioning. The machine table can orient the job so that it can be machined on several surfaces, as required. Finally, a fourth feature possessed by some machining centers is the presence of two tables or pallets on which the work piece can be fixtured. While the machining sequence is being performed on one work part, the operator can be unloading the previously completed piece, and loading the next one. This improves machine tool utilization because the machine does not have to stand idle during loading and unloading of the work parts.

THE NC PROCEDURE

To utilize numerical control in manufacturing, the following steps must be accomplished.

l. *Process Planning*. The engineering drawing of the workpart must be interpreted in terms of the manufacturing processes to be used. this step is referred to as process planning and it is concerned with the preparation of a route sheet. The route sheet is a listing of the sequence of operations which must be performed on the workpart. It is called a route sheet because it also lists the machines through which the part must be routed in order to accomplish the sequence of operations. We assume that some of the operations will be performed on one or more NC machines.

2. *Part programming*. A part programmer plans the process for the portions of the job to be accomplished by NC. Part programmers are knowledgeable about the machining process and they have been trained to program for numerical control. They are responsible for planning the sequence of machining steps to be performed by NC and to document these in a special format. There are two ways to program for NC:

Manual part programming

Computer-assisted part programming

In manual programming, the machining instructions are prepared on a form called a part program manuscript. The manuscript is a listing of the relative cutter/work piece positions which must be followed to machine the part. In computer-assisted part programming, much of the tedious computational work required in manual part programming is transferred to the computer. This is especially appropriate for complex work piece geometries and jobs with many machining steps. Use of the computer in these situations results in significant savings in part programming time.

3. *Tape preparation*. A punched tape is prepared from the part programmer‘s NC process plan. In manual part programming, the punched tape is prepared directly from the part program manuscript on a typewriter like device

equipped with tape punching capability. In computer-assisted part programming, the computer interprets the list of part programming instructions, performs the necessary calculations to convert this into a detailed set of machine tool motion commands, and then controls a tape punch device to prepare the tape for the specific NC machine.

4. *Tape verification*. After the punched tape has been prepared, a method is usually provided for checking the accuracy of the tape. Some times the tape is checked by running it through a computer program which plots the various tool movements (or table movements) on paper. In this way, major errors in the tape can be discovered. The "acid test" of the tape involves trying it out on the machine tool to make the part. A foam or plastic material is sometimes used for this tryout. Programming errors are not uncommon, and it may require about three attempts before the tape is correct and ready to use.

5. *Production*. The final step in the NC procedure to use the NC tape in production. This involves ordering the raw workparts specifying and preparing the tooling and any special fixturing that may be required, and setting up The NC machine tool for the job. The machine tool operator's function during production is to load the raw workpart in the machine and establish the starting position of the cutting tool relative to the workpiece. The NC system then takes over and machines the part according to the instructions on tape. When the part is completed, the operator removes it from the machine and loads the next part.

NC COORDINATE SYSTEMS

In order for the part programmer to plan the sequence of positions and movements of the cutting tool relative to the workpiece, it is necessary to establish a standard axis system by which the relative positions can be specified. Using an NC drill press as an example, the drill spindle is in a fixed vertical position, and the table is moved and controlled relative to the spindle. However, to make things easier for the programmer, we adopt the viewpoint that the workpiece is stationary while the drill bit is moved relative to it. Accordingly, the coordinate system of axes is established with respect to the machine table.

Two axes, x and y, are defined in the plane of the table, as shown in Figure . The z axis is perpendicular to this plane and movement in the z direction is

controlled by the vertical motion of the spindle. The positive and negative directions of motion of tool relative to table along these axes are as shown in Figure 7. A. NC drill presses are classified as either two-axis or three-axis machines, depending on whether or not they have the capability to control the z axis.

A numerical control milling machine and similar machine tools (boring mill for example) use an axis system similar to that of the drill press. However, in addition to the three linear axes, these machines may possess the capacity to control

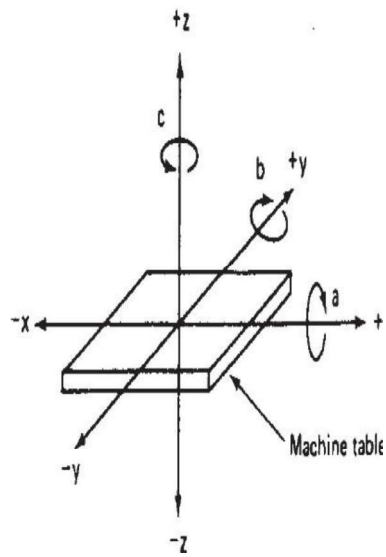

FIGURE NC machine tool axis system for milling and drilling operations.

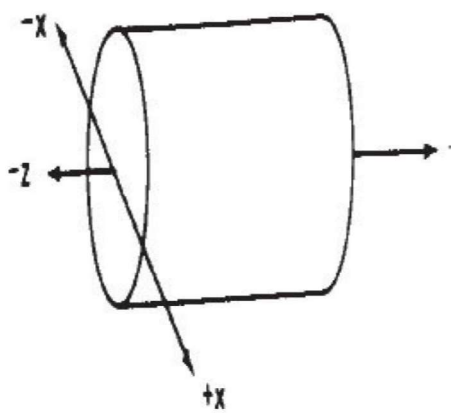

FIGURE NC machine tool axis system for turning operation.

one or more rotational axes. Three rotational axes are defined in NC: the a, b, and c axes. These axes specify angles about the x, y, and z axes, respectively. To distinguish positive from negative angular motions, the "right-hand rule" can be used. Using the right hand with the thumb pointing in the positive linear axis direction (x, y, or z), the fingers of the hand are curled to point in the positive rotational direction.

For turning operations, two axes are normally all that are required to command the movement of the tool relative to the rotating work piece. The z axis is the axis of rotation of the work part, and x axis defines the radial location of the cutting tool. This arrangement is illustrated in Figure.

The purpose of the coordinate system is to provide a means of locating the tool in relation to the work piece. Depending on the NC machine, the part programmer may have several different options available for specifying this location.

Fixed zero and floating zero

The programmer must determine the position of the tool relative to the origin (zero point) of the coordinate system. NC machines have either of two methods for specifying the zero point. The first possibility is for the machine to have a fixed zero. In this case, the origin is always located at the same position on the machine. Usually, that position is the southwest comer (lower left-hand comer)of the table and all tool locations will be defined by positive x and y coordinates.

The second and more common feature on modern NC machines allows the machine operator to set the zero point at any position on the machine table. This feature is called floating zero. The part programmer is the one who decides where the zero point should be located. The decision is based on part programming convenience. For example, the work part may be symmetrical and the zero point should be established at the center of symmetry.

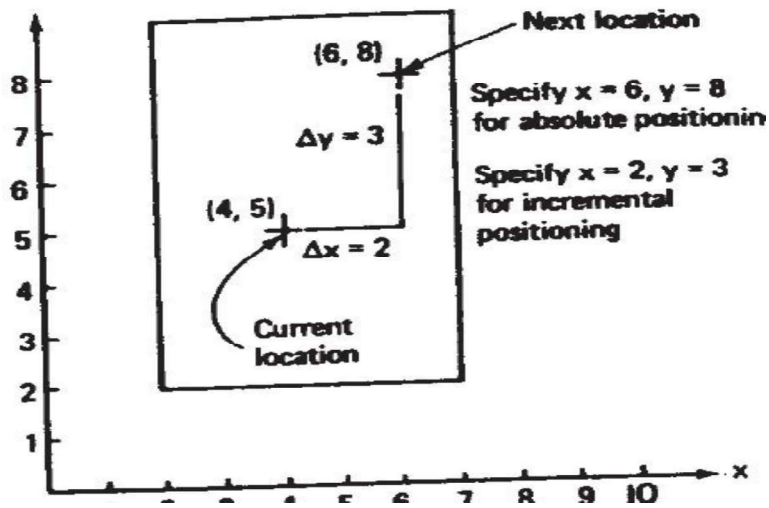

FIGURE Absolute versus incremental positioning.

The location of the zero point is communicated to the machine operator. At the beginning of the job, the operator moves the tool under manual control to some "target point" on the table. The target point is some convenient place on the work piece or table for the operator to position the tool. For example, it might be a predrilled hole in the work piece. The target point has been referenced to the zero point by the part programmer. In fact, the programmer may have selected the target point as the zero point for tool positioning. When the tool has been positioned at the target point, the machine operator presses a "zero" button on the machine tool console, which tells the machine where the origin is located for subsequent tool movements.

Absolute positioning and incremental positioning

Another option sometimes available to the part programmer is to use either an absolute system of tool positioning or an incremental system. Absolute positioning means that the tool locations are always defined in relation to the zero point. If a hole is to be drilled at a spot that is 8 in. above the x axis and 6in. to the right of the y axis, the coordinate location of the bole would be specified as x = +6.OOO and y = +8.OOO. By contrast, incremental positioning means that the next tool location must be defined with reference to the previous tool location. If in our drilling example, suppose that the previous hole had been drilled at an absolute

position of x = +4.OOO and y = +5.OOO. Accordingly, the incremental position instructions would be specified as x = +2.OOO and y = +3.OOO in order to move the drill to the desired spot. Figure illustrates the difference between absolute and incremental positioning.

NC MOTION CONTROL SYSTEMS

In order to accomplish the machining process, the cutting tool and workpiece must be moved relative to each other. In NC, there are three basic types of motion control systems: -

l. Point-to-point

2. Straight cut

3. Contouring

Point-to-point systems represent the lowest level of motion control between the tool and workpiece. Contouring represents the highest level of control.

Point-to-point NC

Point-to-point (PTP) is also sometimes called a positioning system. In PTP, the objective of the machine tool control system is to move the cutting tool to a predefined location. The speed or path by which this movement is accomplished is not import in point-to-point NC. Once the tool reaches the desired location, the machining operation is performed at that position.

NC drill presses are a good example of PTP systems. The spindle must first be positioned at a particular location on the work piece. This is done under PTP control. Then the drilling of the hole is performed at the location, and so forth. Since no cutting is performed between holes, there is no need for controlling the relative motion of the tool and work piece between hole locations. Figure illustrates the point-to-point type of control.

Positioning systems are the simplest machine tool control systems and are therefore the least expensive of the three types. However, for certain processes, such as drilling operations and spot welding, PIP is perfectly suited to the task and any higher level of control would be unnecessary.

Straight-cut NC

Straight-cut control systems are capable of moving the cutting tool parallel to one of the major axes at a controlled rate suitable for machining. It is therefore appropriate for performing milling operations to fabricate workpieces of rectangular configurations. With this type of NC system it is not possible to combine movements in more than a Single axis direction. Therefore, angular cuts on the workpiece would not be possible. An example of a straight-cut operation is shown in Figure.

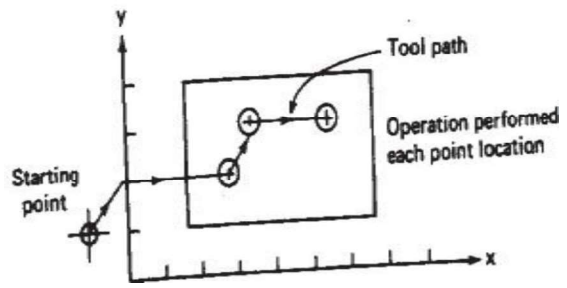

FIGURE Point-to-point (positioning) NC system.

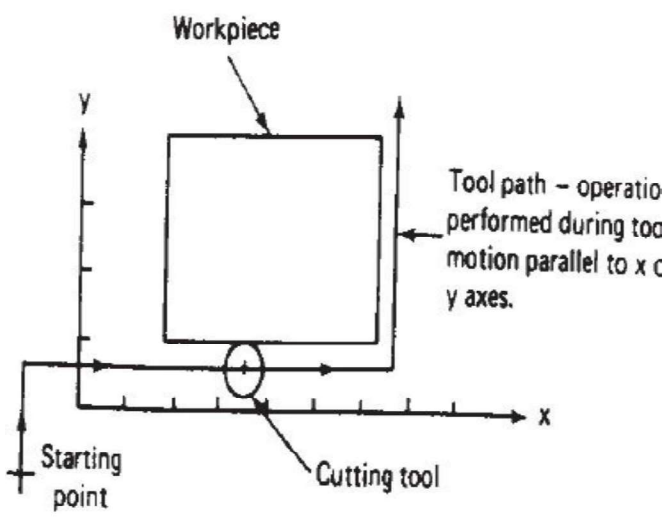

FIGURE Straight-cut system.

An NC machine capable of straight cut movements is.-also capable of PTP movements.

Contouring NC

Contouring is the most complex, the most flexible, and the most expensive type of machine tool control. It is capable of performing both PTP and straight-cut operations. In addition, the distinguishing feature of contouring NC systems is their capacity for simultaneous control of more than one axis movement of the machine tool. The path of the cutter is continuously controlled to generate the desired geometry of the workpiece. For this reason, contouring systems are also called continuous-path NC systems. Straight or plane surfaces at any orientation, circular paths, conical shapes, or most any other mathematically definable form are possible under contouring control. Figure illustrates the versatility of continuous path NC. Milling and turning operations are common examples of the use of contouring control.

In order to machine a curved path in a numerical control contouring system, the direction of the feed rate must continuously be changed so as to follow the path. This is accomplished by breaking the curved path into very short straight-line segments that approximate the curve. Then the tool is commanded to machine each segment in succession. What results is a machined outline that closely approaches

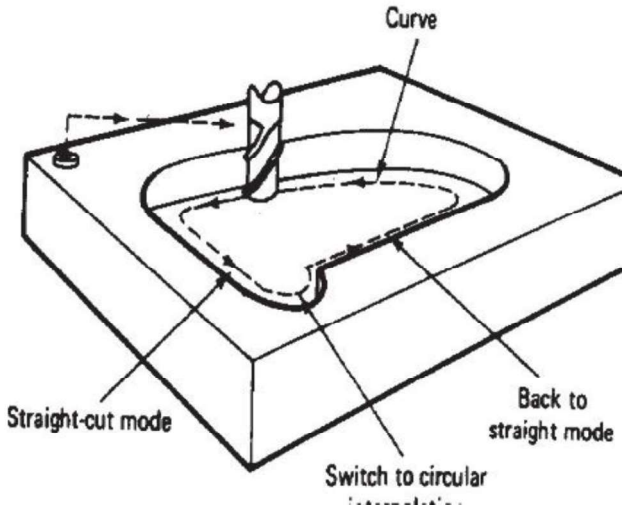

FIGURE Contouring (continuous path) NC system for two-dimensional operations.

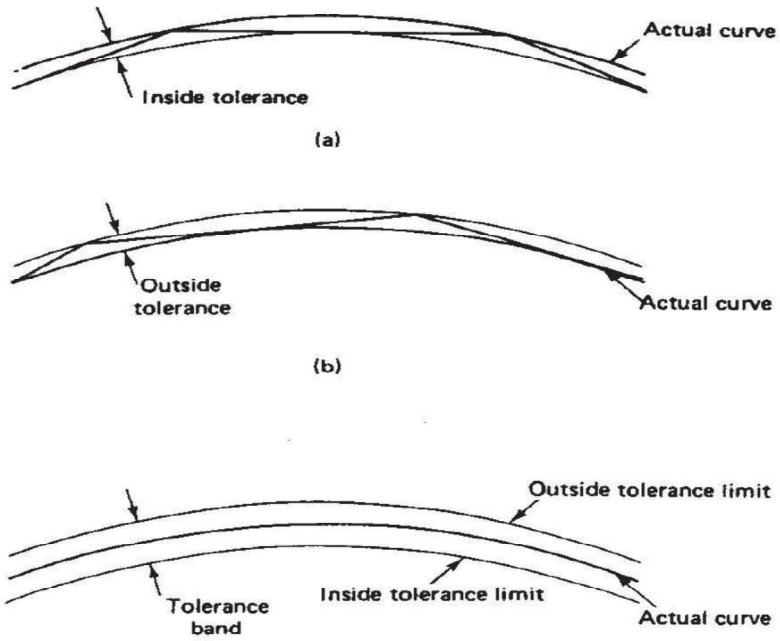

FIGURE Approximation of a curved path in NC by a series of straight-line segments.

The accuracy of the approximation is controlled by the "tolerance" between the actual curve and the maximum deviation of the straight-line segments. In (a), the tolerance is defined on the inside of the curve. It is also possible to define the tolerance on the outside of the curve, as in (b). Finally, the tolerance can be specified on both inside and outside, as shown in (c).

the desired shape. The maximum error between the two can be controlled by the length of the individual line segments, as illustrated in Figure.

APPLICATIONS OF NUMERICAL CONTROL

Numerical control systems are widely used in industry today, especially in the metalworking industry. By far the most common application of NC is for metal cutting machine tools. Within this category, numerically controlled equipment has been built to perform virtually the entire range of material removal processes, including:

Milling

Drilling and related processes

Boring

Turning

Grinding

Sawing

Within the machining category, NC machine tools are appropriate for certain jobs and inappropriate for others. Following are the general characteristics of production jobs in metal machining for which numerical control would be most appropriate:

l. Parts are processed frequently and in small lot sizes.

2. The part geometry is complex.

3. Many operations must be performed on the part in its processing.

4. Much metal needs to be removed.

5. Engineering design changes are likely.

6. Close tolerances must be held on the workpart.

7. It is an expensive part where mistakes in processing would be costly.

8. The parts require lOO% inspection

It has been estimated that most manufactured parts are produced in lot sizes of 5O or fewer. Small-lot and batch production jobs represent the ideal situations for the application of NC. This is made possible by the capability to program the NC machine and to save that program for subsequent use in future orders. If the NC programs are long and complicated (complex part geometry, many operations, much metal removed), this makes NC all the more appropriate when compared to manual methods of production. If engineering design changes or shifts in the production schedule are likely, the use of tape control provides the flexibility needed to adapt to these changes. Finally, if quality and inspection are important issues (close tolerances, high part cost, lOO% inspection required), NC would be most suitable, owing to its high accuracy and repeatability.

In order to justify that a job be processed by numerical control methods, it is not necessary that the job possess every one of these attributes. However, the more of

these characteristics that are present, the more likely it is that the part is a good candidate for NC.

In addition to metal machining, numerical control has been applied to a variety of other operations. The following, although not a complete list, will give the reader an idea of the wide range of potential applications of NC:

Pressworking machine tools

Welding machines

Inspection machines

Automatic drafting

Assembly machines

Tube bending

Flame cutting

Plasma arc cutting

Laser beam processes

Automated knitting machines

Cloth cutting

Automatic riveting

Wire-wrap machines

Advantages of NC

Following are the advantages of numerical control when it is utilized in the type of production jobs described.

l. *Reduced nonproductive time*. Numerical control has little or no effect on the basic metal, cutting (or other manufacturing) process. However; NC can increase the proportion of time the machine is engaged in the actual process. It accomplishes this by means of fewer setups, less time in setting up, reduced work piece handling time, automatic tool changes on some machines, and so on. In a University of Michigan survey reported by Smith and Evans, a comparison was made between the machining cycle times for conventional machine tools versus the cycle times for NC machines. NC cycle times, as a percentage of their conventional counterparts,

ranged from 35% for five-axis machining centers to 65% for presswork punching. The advantage for numerical control tends to increase with the more complex processes.

2. *Reduced fixturing*. NC requires fixtures which are simpler and less costly to fabricate because the positioning is done by the NC tape rather than the jig or fixture

3. *Reduced manufacturing lead time*. Because jobs can be set up more quickly with NC and fewer setups are generally required with NC, the lead time to deliver a job to the customer is reduced.

4. *Greater manufacturing flexibility*. With numerical control it is less difficult to adapt to engineering design changes alterations of the production schedule, changeovers in jobs for rush orders, and so on.

5. *Improved quality control*. NC is ideal for complicated workparts where the chances of human mistakes are high. Numerical control produces parts with greater accuracy, reduced scrap, and lower inspection requirements. 6. *Reduced inventory*. Owing to fewer setups and shorter lead times with numerical control, the amount of inventory carried by the company is reduced.

7. *Reduced floor space requirements*. Since one NC machining center can often accomplish the production of several conventional machines, the amount of floor space required in an NC shop is usually less than in a conventional shop.

Disadvantages of NC

Along with the advantages of NC, there are several features about NC which must be considered disadvantages:

l. *Higher investment cost*. Numerical control machine tools represent a more sophisticated and complex technology. This technology costs more to buy than its non-NC counterpart. The higher cost requires manufacturing managements to use these machines more aggressively than ordinary equipment. High machine utilization is essential on order to get reasonable returns on investment. Machine shops must operate their NC machines two or three sifts per day to achieve this high machine utilization.

2. *Higher maintenance cost*. Because NC is a more complex technology and because NC machines are used harder, the maintenance problem becomes more

acute. Although the reliability of NC systems has been improved over the years, maintenance costs for NC machines will generally be higher than for conventional machine tools.

3. *Finding and/or training NC personnel*. Certain aspects of numerical control shop operations require a higher skill level than conventional operations. Part programmers and NC maintenance personnel are two skill areas where available personnel are in short supply. The problems of finding, hiring, and training these people must be considered a disadvantage to the NC shop.

The ladder logic diagram is an excellent way to represent the combinatorial lO control problems in which the output variables are based directly on the values of inputs. As indicated by Example 9.6, it can also be used to display sequential control (timer) problems, although the diagram is somewhat more difficult to interpret and analyze for this purpose. The ladder diagram is the principal technique for setting up the control programs in PLCs.

PROGRAMMABLE LOGIC CONTROLLERS

A programmable logic controller (PLC) can be defined as a microcomputer-based controller that uses stored instructions in programmable memory to implement logic sequencing, timing, counting, and arithmetic functions through digital or anal input/output (I/O) modules, for controlling machines and processes. PLC applications are found in both the process industries and discrete manufacturing. Examples of applications in process industries include chemical processing, paper mill operations, and food production. PLCs are primarily associated with discrete manufacturing industries to control individual machines, machine cells, transfer lines, material handling equipment, and automated storage systems. Before the PLC was introduced around l97O hard-wired controllers composed of relays, coils, counters, timers, and similar components were used to implement this type of industrial control. Today, many older pieces of equipment are being retrofitted with PLCs to replace the original hard wired controllers, often making the equipment more productive and reliable than when it was new.

In this section, we describe the components, programming, and operation of the PLC. Although its principal applications are in logic control and sequencing

(discrete control), many PLCs also perform additional functions, surveyed later in the section.

Components of the PLC

A schematic diagram of a PLC is presented in Figure. The basic components of the PLC are the following: (l) processor, (2) memory unit, (3) power supply, (4) I/O module, and (5) programming device. These components are housed in a suitable cabinet designed for the industrial environment.

The processor is the central processing unit (CPU) of the programmable controller. It executes the various logic and sequencing functions by operating on the PLC inputs to determine the appropriate output signals. The CPU consists of one or more microprocessors similar to those used in PCs and other data processing equipment. The difference is that they have a real-time operating system and are programmed to facilitate I/O transactions and execute ladder logic functions. In addition, PLCs are hardened so that the CPU and other electronic components will operate in the electrically noisy environment of the factory.

Connected to the CPU is the PLC memory unit, which contains the programs of logic, sequencing, and I/O operations. It also holds data files associated with these programs, including I/O status bits, counter and timer constants, and other variable and parameter values. This memory unit is referred to as the user or application memory because its contents are entered by the user. In addition, the processor also contains the operating system memory, which directs the execution of the-control program and c6Ordinates I/O operations. The operating system is entered by the PLC manufacturer and cannot be accessed or altered by the user.

A power supply of ll5 V ac is typically used to drive the PLC (some units operate on 23O V ac). The power supply converts the ll5 V ac into direct current (dc) voltages of ±5 V. These low voltages are used to operate equipment that may have much higher voltage and power ratings than the PLC itself. The power supply often includes a battery backup that switches on automatically in the event of an external power source failure.

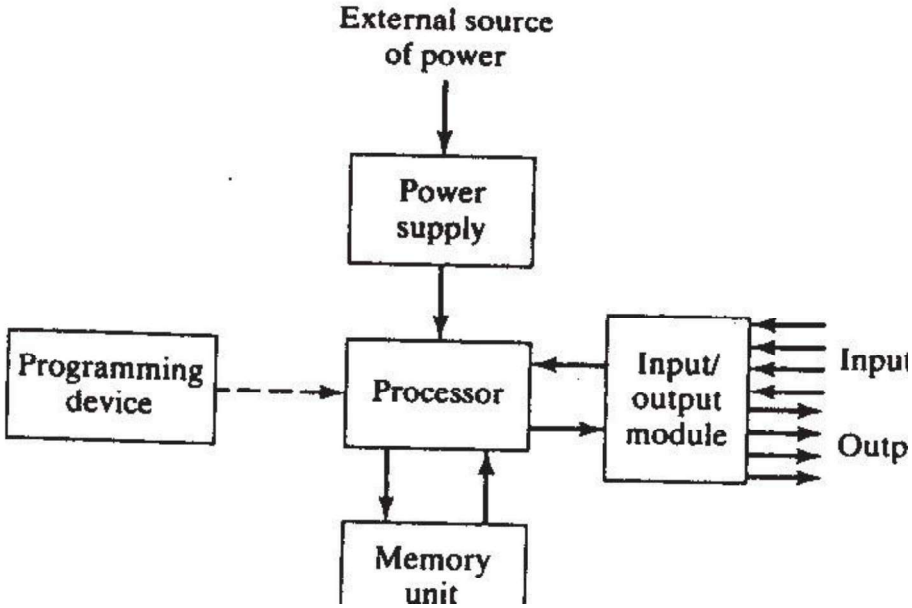

Figure Components of a PLC.

The input/output module provides the connections to the industrial equipment or process that is to be controlled. Inputs to the controller are signals from limit switches, push-buttons, sensors, and other on/off devices. Outputs from the controller are on/off signals to operate motors, valves, and other devices required to actuate the process. In addition, many PLCs are capable of accepting continuous signals from analog sensors and generating signals suitable for analog actuators. The size of a PLC is usually rated in terms of the number of its I/O terminals, as indicated in Table.

The PLC is programmed by means of a programming device. The programming device is usually detachable from the PLC cabinet so that it can be shared among different controllers. Different PLC manufacturers provide different devices, ranging from simple teach-pendant type devices, similar to those used in robotics, to special PLC programming keyboards and displays. Personal computers can also be used to program PLCs. A PC used for this purpose sometimes remains connected to the PLC to serve a process monitoring or supervisory function and for conventional data processing applications related to the process.

PLC Operating Cycle

As far as the PLC user is concerned, the steps in the control program are executed simultaneously and continuously. In truth, a certain amount of time is required for the PLC processor to execute the user program during one cycle of

operation. The typical operating cycle of the PLC, called a scan, consists of three parts: (l) input scan, (2) program scan, and (3) output scan. During the input scan, the inputs to the PLC are read by the processor and the status of these inputs is stored in memory. Next, the control program is executed during the program scan. The input values stored in memory are used in the control logic calculations to determine the values of the outputs. Finally, during the output scan, the outputs are updated to agree with the calculated values. The time to perform the scan is called the scan time, and this time depends on the number of inputs that must be read, the complexity of control functions to be performed, and the number of outputs that must be changed. Scan time also depends on the clock speed of the processor. Scan times typically vary between 1 and 25 sec.

One of the potential problems that can occur during the scan cycle is that the value of an input can change immediately after it has been sampled. Since the program uses the input value stored in memory, any output values that are dependent on that input are determined incorrectly. There is obviously a potential risk involved in this mode of operation. However, the risk is minimized because the time between updates is so short that it is unlikely that the output value being incorrect for such a short time will have a serious effect on process operation. The risk becomes most significant in processes in which the response times are very fast and where hazards can occur during the scan time. Some PLCs have special features for making "immediate" updates of output signals when input variables are known to cycle back and forth at frequencies faster than the scan time.

TABLE Typical Classification of PLCs by Number of Input/Output Terminals

PLC Size	I/O Count
Large PLC	Ç lO24
Medium PLC	< lO24
Small PLC	< 256
Micro PLC	Ç 32
Nano PLC	Ç l6

Additional Capabilities of the PLC

The PLC has evolved to include several capabilities in addition to logic control and sequencing. Some of these additional capabilities available on many commercial PLCs include

Analog control. Proportional-integral-derivative (PID) control is available on some programmable controllers. These control algorithms have traditionally been implemented using analog controllers. Today the analog control schemes are approximated using the digital computer, with either a PLC or a computer process controller.

Arithmetic functions. These functions are addition, subtraction, multiplication, and division. Use of these functions permits more complex control algorithms to be developed than what is possible with conventional logic and sequencing elements.

Matrix functions. Some PLCs have the capability to perform matrix operations on stored values in memory. The capability can be used to compare the actual values of a set of inputs and outputs with the values stored in the PLC memory to determine if some error has occurred.

Data processing and reporting. These functions are typically associated with business applications of PCs. PLC manufacturers have found it necessary to include these PC capabilities in their controller products, as the distinction between PCS and PLCs blurs.

Programming the PLC

Programming is the means by which the user enters the control instructions to the PLC through the programming device. The most basic control instructions consist of switching, logic, sequencing, counting, and timing. Virtually all PLC programming methods provide instruction sets that include these functions. Many control applications require additional instructions to accomplish analog control of continuous processes, complex control logic, data processing and reporting, and other advanced functions not readily performed by the basic instruction set. Owing to these differences in requirements, various PLC programming languages have been

developed. A standard for PLC programming was published by the International Electro technical Commission in l992, entitled International Standard for Programmable Controllers (IEC ll3l-3). This standard specifies three graphical languages and two text-based languages for programming PLCs, respectively: (l) ladder logic diagrams, (2) function block diagrams, (3) sequential functions charts. (4) instruction list, and (5) structured text. Table 9.9 lists the five languages along with the most suitable application of each. IEC ll3l-3 also states that the five languages must be able to interact with each other to allow for all possible levels of control sophistication in any given application.

TABLE Features of the Five PLC Languages Specified in the IEC ll3l-3 Standard Applications Best Suited for

Language	Abbreviation	Type	Applications Best Suited for
Ladder logic diagram	(LD)	Graphical	Discrete control
Function block diagram	(FBD)	Graphical	Continuous control
Sequential function chart	(SFC)	Graphical	Sequencing
Instruction list	(IL)	Textual	Discrete control
Structured text	(ST)	Textual	Complex logic, computations, etc.

Ladder Logic Diagram. The most widely used PLC programming language today involves ladder diagrams (LDs), examples of which are shown in several previous figures. Ladder diagrams are very convenient for shop personnel who are familiar with ladder and circuit diagrams but may not be familiar with computers and computer programming. To use ladder logic diagrams, they do not need to learn an entirely new programming language.

Direct entry of the ladder logic diagram into the PLC memory requires the use of a keyboard and monitor with graphics capability to display symbols representing the components and their interrelationships in the ladder logic diagram. The PLC keyboard is often designed with keys for each of the individual symbols. Programming is accomplished by inserting the appropriate components into the rungs of the ladder diagram. The components are of two basic types: contacts and coils, as described in Section 9.2. Contacts represent input switches, relay contacts,

and similar elements. Coils represent loads such as motors, solenoids, relays, timers, and counters. In effect, the programmer inputs the ladder logic circuit diagram rung by rung into the PLC memory with the monitor displaying the results for verification.

Function Block Diagrams. A function block diagram (FED) provides a means of inputting high-level instructions. Instructions are composed of operational blocks. Each block has one or more inputs and one or more outputs. Within a block, certain operations take place on the inputs to transform the signals into the desired outputs. The function blocks include operations such as timers and counters, control computations using equations (e.g., proportional-integral-derivative control), data manipulation, and data transfer to other computer-based systems. We leave further description of these function blocks to other references, such as Hughes and the operating manuals for commercially available PLC products.

Sequential Function Charts. The sequential function chart (SFC, also called the Grafcet method) graphically displays the sequential functions of an automated system as a series of steps and transitions from one state of the system to the next. The sequential function chart is described in Boucher . It has become a standard method for documenting logic control and sequencing in much of Europe. However, its use in the United States is more limited, and we refer the reader to the cited reference for more details on the method.

Instruction List. Instruction list (IL) programming also provides a way of entering the ladder logic diagram into PLC memory. In this method, the programmer uses a low-level computer language to construct the ladder logic diagram by entering statements

TABLE Typical Low-Level Language Instruction Set for a PLC

STR	Store a new input and start a new rung of the ladder.
AND	Logical AND referenced with the previously entered element. This is interpreted as a series circuit relative to the previously entered element.
OR	Logical OR referenced with the previously entered element. This is interpreted as a parallel circuit relative to the previously entered element.
NOT	Logical NOT or inverse of entered element.
OUT	Output element for the rung of the ladder diagram.

TMR	Timer element. Requires one input signal to initiate timing sequence. Output is delayed relative to input by a duration specified by the programmer in seconds. Resetting the timer is accomplished by interrupting (stopping) the input signal.
CTR	Counter element. Requires two inputs: One is the incoming pulse train that is counted by the CTR element, the other is the reset signal indicating a restart of the counting procedure.

that specify the various components and their relationships for each rung of the ladder diagram. Let us explain this approach by introducing a hypothetical PLC instruction set. Our PLC "language" is a composite of various manufacturers' languages. It contains fewer features than most commercially available PLCs. We assume that the programming device consists of a suitable keyboard for entering the individual components on each rung of the ladder logic diagram. A monitor capable of displaying each ladder rung (and perhaps several rungs that precede it) is useful to verify the program. The instruction set for our PLC is presented in Table with a concise explanation of each instruction.

Numerical control part programming is the procedure by which the sequence of processing steps to be performed on the NC machine is planned and documented. It involves the preparation of a punched tape (or other input medium) used to transmit the processing instructions to the machine tool. There are two methods of part programming: manual part programming and computer-assisted part programming. In this chapter we describe both of these methods, with emphasis on the latter.

It is appropriate to begin the discussion of NC part programming by examining the way in which the punched tape is coded. Coding of the punched tape is concerned with the basic symbols used to communicate a complex set of instructions to the NC machine tool. In numerical control, the punched tape must be generated whether the part programming is done manually or with the assistance of some computer package. With either method of part programming, the tape is the net result of the programming effort. In coming sections our attention will be focused on the punched tape and the structure of the basic language used by the NC system.

PUNCHED TAPE IN NC

The part program is converted into a sequence of machine tool actions by means of the input medium, which contains the program, and the controller unit, which interprets the input medium. The controller unit and the input medium must be compatible. That is, the input medium uses coded symbols which represent the art program, and the controller unit must be capable of reading those symbols. [be most common input medium is punched tape. The tape has been standardized, O that type punchers are manufactured to prepare the NC tapes, and tape readers part of the controller unit) can be manufactured to read the tapes. The punched ape used for NC is 1 in. wide. It is standardized as shown in Figure by the electronics Industries Association (EIA), which has been responsible for many of he important standards in the NC industry.

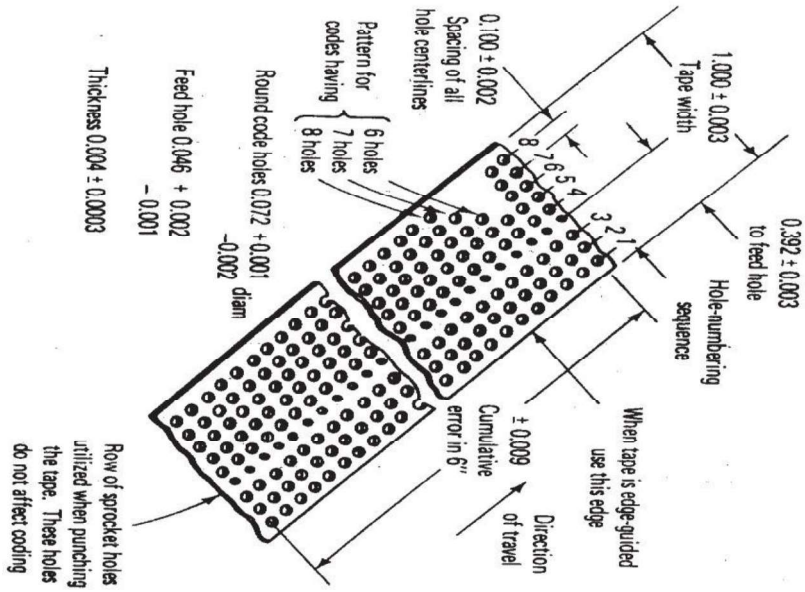

There are two basic methods of preparing the punched tape. The first method associated with manual part programming and involves the use of a typewriter like device. Figure illustrates a modern version of this kind of equipment. The operator types directly from the part programmer's handwritten list of coded instructions. This produces a typed copy of the program as well as the punched type. The second method is used with computer-assisted part programming. By this approach, the tape is prepared directly by the computer using a device called a tape punch.

By either method of preparation, the punched tape is ready for use. During production on a conventional NC machine, the tape is fed through the tape reader once for each workpiece. It is advanced through the tape reader one instruction at a time. While the machine tool is performing one instruction, the next instruction is being read into the controller unit's data buffer. This makes the operation of the NC system more efficient. After the last instruction has been read into the controller, the tape is rewound back to the start of the program to be ready for the next workpart.

TAPE CODING AND FORMAT

NC tape coding

As shown in Figure, there are eight regular columns of holes running in the lengthwise direction of the tape. There is also a ninth column of holes between the third and fourth regular columns. However, these are smaller and are used as sprocket holes for feeding the tape.

Figure shows a hole present in nearly every position of the tape. However, the coding of the tape is provided by either the presence or absence of a hole in the various positions. Because there are two possible conditions for each position–either the presence or absence of a hole–this coding system is called the binary code. It uses the base 2 number system, which can represent any number in the more familiar base lO or decimal system. The NC tape coding system is used to code not only numbers, but also alphabetical letters and other symbols. Eight columns provide more than enough binary digits to define any of the required symbols.

How instructions are formed

A binary digit is called a bit. It has a value of O or **1** depending on the absence or presence of a hole in a certain row and column position on the tape. (Columns of hole positions run lengthwise along the tape. Row positions run across the tape.) Out of a row of bits, a character is made. A character is a combination of bits, which represents a letter, number, or other symbol. A word is a collection of characters used to form part of an instruction. Typical NC words are x position, y position, cutting speed, and so on. Out of a collection of words, a block is formed. A block of words is a complete NC instruction. Using an NC drilling operation as an example, a block might contain information on the x and y coordinates of the hole ocation, the speed and feed at which the cut should be run, and perhaps even a specification of the cutting tool.

To separate blocks, an end-of-block (EOB) symbol is used (in the EIA standard, this is a hole in column 8). The tape reader feeds the data from the tape into the buffer in blocks. That is, it reads in a complete instruction at a time.

NC words

Following is a list of the different types of words in the formation of a block. Not very NC machine uses all the words. Also, the manner in which the words are expressed will differ between machines. By convention, the words in a block are given in the following order:

EQUENCE NUMBER (n-words): This is used to identify the block.

REPARATORY WORD (g-words): This word is used to prepare the controller for instructions that are to follow. For example, the word gO2 is used to prepare the C controller unit for circular interpolation along an arc in the clockwise direction. The preparatory word l& needed S9 that the controller can correctly interpret the data that follow it in the block.

COORDINATES (x-, y-, and z-words): These give the coordinate positions of the tool. In a two-axis system, only two of the words would be used. In a four- or five-axis machine, additional a-words and V or b-words would specify the angular positions.

Although different NC systems use different formats for expressing a coordinate, we will adopt the convention of expressing it in the familiar decimal form: For example, x + 7.235 ory-O.5ao. Some formats do not use the decimal point in writing the coordinate. The + sign to define a positive coordinate location is optional. The negative sign is, of course, mandatory.

FEED RATE (f-word): This specifies the feed in a machining operation. Units are inches per minute (ipm) by convention.

CUTTING SPEED (s-word): This specifies the cutting speed of the process, the rate at which the spindle rotates.

TOOL SELECTION (t-word): This word would be needed only for machines with a tool turret or automatic tool changer. The t-word specifies which tool is to be used in the operation. For example, tO5 might be the designation of a l/2-in. drill bit in turret position 5 on an NC turret drill.

MSCELLANEOUS FUNCTION (m-word): The m-word is used to specify certain miscellaneous or auxiliary functions which may be available on the machine tool. Of

course, the machine must possess the function that is being called. An example would be mO3 to start the spindle rotation. The miscellaneous function is the last word in the block. To identify the end of the instruction, an end-of-block (EOB) symbol is punched on the tape.

MANUAL PART PROGRAMMING

To prepare a part program using the manual method, the programmer writes the machining instructions on a special form called a part programming manuscript. The instructions must be prepared in a very precise manner because-the typist prepares the NC tape directly from the manuscript. Manuscripts come in various forms, depending on the machine too land tape format to be used. For example, the manuscript form for a two-axis point-to-point drilling machine would be different than one for a three-axis contouring machine. The manuscript is a listing of the relative tool and workpiece locations. It also includes other data, such as preparatory commands, miscellaneous instructions, and speed/ feed specifications, all of which are needed to operate the machine under tape control.

Manual programming jobs can be divided into two categories: point-to-point jobs and contouring jobs. Except for complex work parts with many holes to be drilled, manual programming is ideally suited for point-to-point applications. On the other hand, except for the simplest milling and turning jobs, manual programming can become quite time consuming for applications requiring continuous-path control of the tool. Accordingly, we shall be concerned only with manual part programming for point-to-point operations. Contouring is much more appropriate for computer-assisted part programming.

The basic method of manual part programming for a point-to-point application is best demonstrated by means of an example.

EXAMPLE

Suppose that the part to be programmed is a drilling job. The engineering drawing for the part is presented in Figure. Three holes are to be drilled at a diameter of 31 in. The close hole size tolerance requires reaming to O.5OO in. diameter.

Recommended speeds and feeds are as follows:

	Speed (rpm)	Speed (in./min)
O.484-in.-diameter drill	592	3.55
O.5OO-in.-diameter drill	382	3.82

The NC drill press operates as follows. Drill bits are manually changed by the machine operator, but speeds and feeds must be programmed on the tape. The machine has the floating-zero feature and absolute positioning.

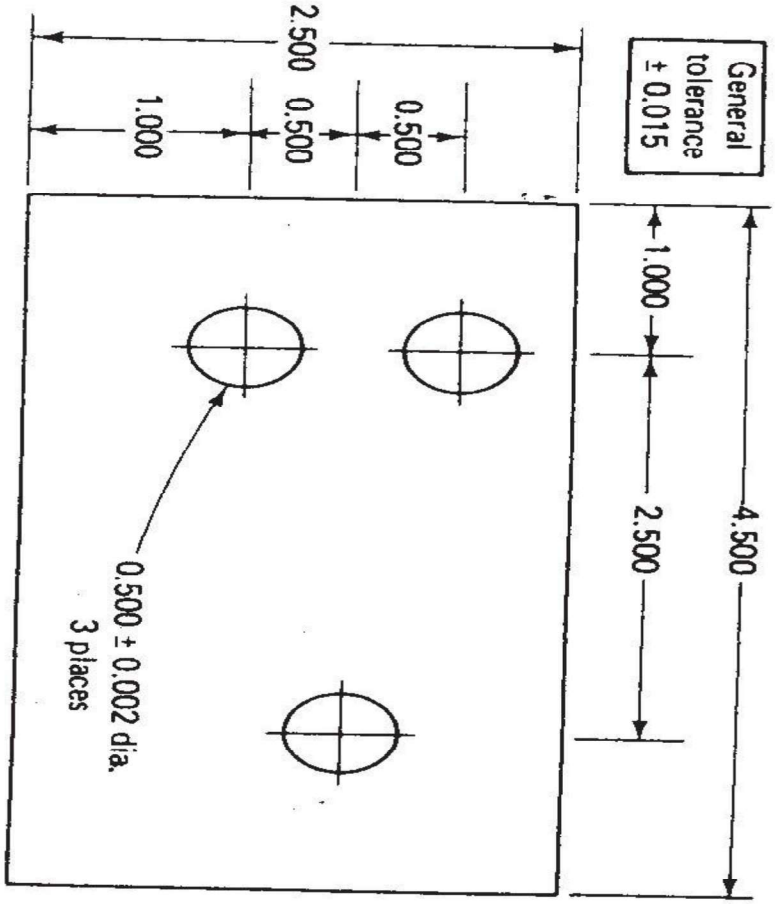

Part drawing for Example.

The first step in preparing the part program is to define the axis coordinates in relation to the work part. We assume that the outline of the part has already been machined before the drilling operation. Therefore, the operator can use one of the comers of the part as the target point. Let us define the lower left-hand comer as the

target point and the origin of our axis system. The coordinates are shown in Figure for the example part. The x and y locations of each hole can be seen in the figure. The completed manuscript would appear as in Figure. The first line shows the x and y coordinates at the zero point. The machine operator would insert the tape and read this first block into the system. (A block of instruction corresponds generally to one line on the manuscript form.) The tool would then be positioned over the target point

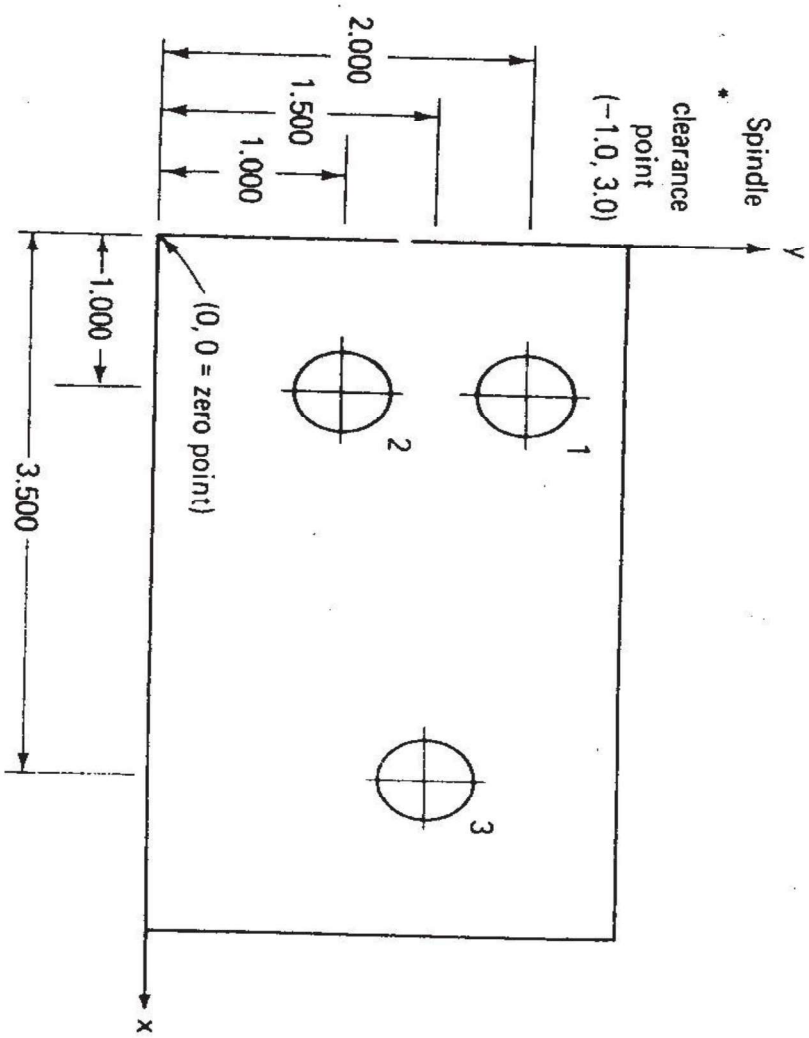

Coordinate system defined for PART IN example

on the machine table. The operator would then press the zero buttons to set the machine.

The next line on the manuscript is RWS, which stands for rewind-stop. This signal is coded into the tape as holes in columns l, 2, and 4. The symbol stops the

tape after it has been rewound. The last line on the tape contains the m3O word, causing the tape to be rewound at the end of the machining cycle. Other m-words used in the program are mO6, which stops the machine for an operator tool change, and ml3, which turns on the spindle and coolant. Note in the last line that the tool has been repositioned away from the work area to allow for changing the workpiece.

NC part programming manuscript
Two axis point-to-point drill press
tab sequential format

Part No. EXAMPLE 8.2 Date 4/4/79

Part Name HOLE PLATE Prepared by MPG

Seq. No.	Tab EOB	x-COORD	Tab EOB	y-COORD	Tab EOB	Feed	Tab EOB	Speed	Tab EOB	m-WORD	Tab EOB	Comments
00 RWS	TAB	0.0	TAB	0.0	EOB							ZERO
01	TAB	1.0	TAB	2.0	TAB	3.55	TAB	592	TAB	13	EOB	DRILL 1
02	TAB		TAB	1.0	EOB							DRILL 2
03	TAB	3.5	TAB	1.5	EOB							DRILL 3
04	TAB	-1.0	TAB	3.0	TAB		TAB		TAB	06	EOB	TOOL CHG
05	TAB	3.5	TAB	1.5	TAB	3.82	TAB	382	TAB	13	EOB	REAM 3
06	TAB	1.0	TAB	1.0	EOB							REAM 2
07	TAB		TAB	2.0	EOB							REAM 1
08	TAB	-1.0	TAB	3.0	TAB		TAB		TAB	06	EOB	TOOL CHG.
09	TAB		TAB		TAB		TAB		TAB	30	EOB	REWIND & CHG PART

Part program manuscript for Example.

COMPUTER-ASSISTED PART PROGRAMMING

The workpart of Example was relatively simple. It was a suitable application for manual programming. Most parts machined on NC systems are considerably more complex. In the more complicated point-to-point jobs and in contouring applications, manual part programming becomes an extremely tedious task and subject to errors. In these instances it is much more appropriate to employ

the high-speed digital computer to assist in the part programming process. Many part programming language systems have been developed to perform automatically cost of the calculations which the programmer would otherwise be forced to do. This saves time and results in a more accurate and more efficient part program.

The part programmer's job

Computer-assisted part programming, the NC procedure for preparing the tape from the engineering drawing is followed as. The machining instructions are

written in English-like statements of the NC programming language, which are then processed by the computer to prepare the tape. The comter automatically punches the tape in the proper tape format for the particular C machine.

The part programmer's responsibility in computer-assisted part programming consists of two basic steps:

l. Defining the workpart geometry

2. Specifying the operation sequence and tool path

No matter how complicated the workpart may appear, it is composed of sic geometric elements. Using a relatively simple workpart to illustrate, consider e component shown in Figure. Although somewhat irregular in overall appearance, the outline, of the part consists of intersecting straight lines and a partial circle. The holes in the part can be expressed in terms of the center location and radius of the hole. Nearly any component that can be conceived by a designer can be described by points, straight lines, planes, circles, cylinders, and other mathematically defined surfaces. It is the part programmer's task to enumerate the ements out of which the part is composed. Each geometric element must be identified and the dimensions and location of the element explicitly defined.

After defining the workpart geometry, the programmer must next construct e path that the cutter will follow to machine the part. This tool path specification involves a detailed step-by-step sequence of cutter moves. The moves are made among the geometry elements, which have previously been defined. The part programmer can use the various motion commands to direct the tool to machine along the workpart surfaces, to go to point locations, to drill holes at these locations, and so on. In addition to part geometry and tool motion statements, the programmer must also provide other instructions to operate the machine tool properly.

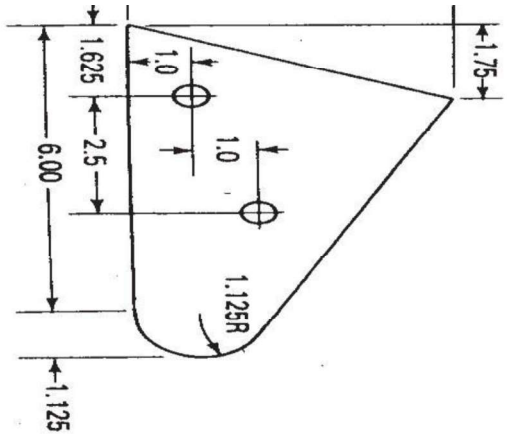

Sample workpart, like other parts, can be defined in terms of basic geometric elements, such as points, lines, and circles.

The computer's job

The computer's job in computer-assisted part programming consists of the following steps:

l. Input translation

2. Arithmetic calculations

3. Cutter offset computation

4. Postprocessor

The sequence of these steps and their relationships to the part programmer and the machine tool are illustrated in Figure.

The part programmer enters the program written in the APT or other language. The input translation component converts the coded instructions contained in the program into computer-usable form, preparatory to further processing.

The arithmetic calculations unit of the system consists of a comprehensive set of subroutines for solving the mathematics required to generate the part surface. These subroutines are called by the various part programming language statements. The arithmetic unit is really the fundamental element in the part programming package. This unit frees the programmer from the time-consuming geometry and

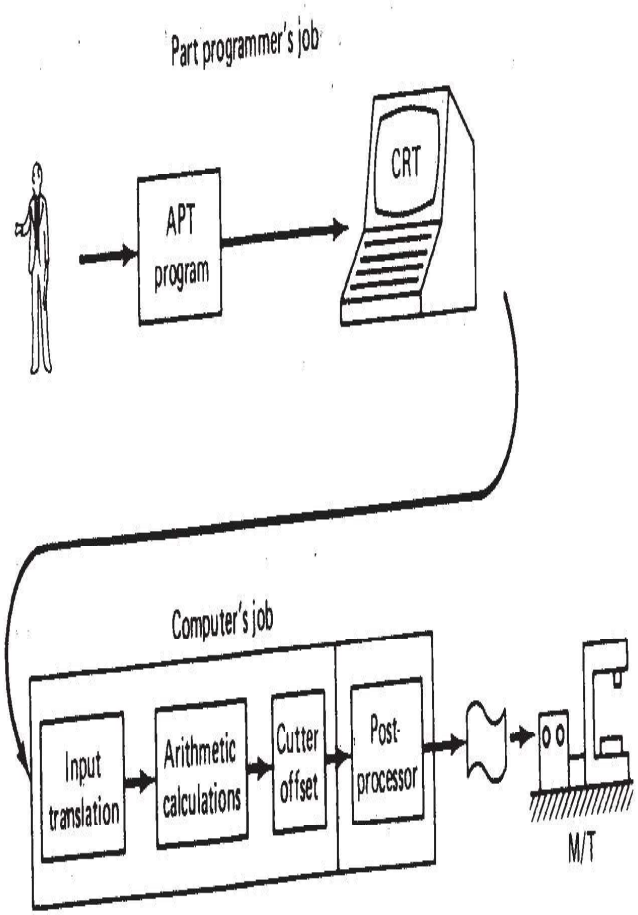

trigonometry calculations, to concentrate on the workpart processing.

Steps in computer-assisted part programming.

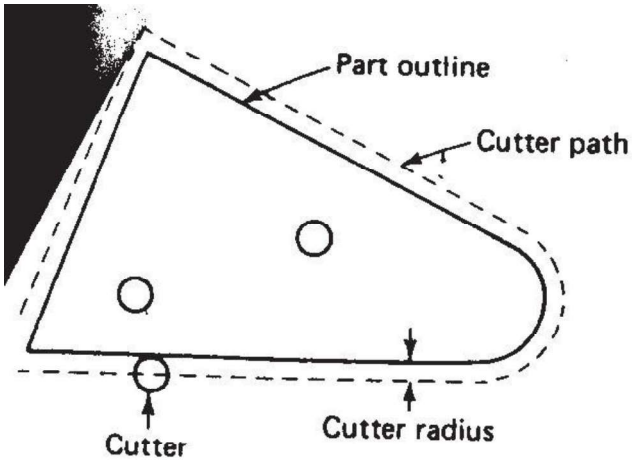

Cutter offset problem in part programming for contouring.

The second task of the part programmer is that of constructing the tool path.

However, the actual tool path is different from the part outline because the tool th is defined as the path taken by the center of the cutter. It is at the periphery of e cutter that machining takes place. The purpose of the cutter offset computations is to offset the tool path from the desired part surface by the radius of the tter. This means that

The part programmer can define the exact part outline in the ometry statements. Thanks to the cutter offset calculation provided by the programming system, the programmer need not be concerned with this task. The tter offset problem is illustrated in Figure.

As noted previously, NC machine tool systems are different. They have different features and capabilities. They use different NC tape formats. Nearly all of part programming languages, including APT, are designed to be general purpose languages, not limited to one or two machine tool types. Therefore, the al task of the computer in computer-assisted part programming is to take the general instructions and make them specific to a particular machine tool system. The unit that performs this task is called a postprocessor.

The postprocessor is a separate computer program that has been written to prepare the punched tape for a specific machine tool. The input to the postprocessor is output from the other three components: a series of cutter locations and other ructions. The output of the postprocessor is the NC tape written in the correct format for the machine on which it is to be used.

Part programming languages

NC part programming language consists of a software package (computer pro) plus the special rules, conventions, and vocabulary words for using that ware. Its purpose is to make it convenient for a part programmer to communicate- the necessary part geometry and tool motion information to the computer so the desired part program can be prepared. The vocabulary words are typically English-like, to make the NC language easy to use.

There have probably been over lOO NC part programming languages loped since the initial MIT research on NC programming in the mid-l95Os. of the languages were developed to meet particular needs and have not survived the test of time. Today, there are several dozen NC languages still in use. Refinements and

enhancements to existing languages are continually being made. The following list provides a description of some of the important NC languages in current use.

APT (Automatically Programmed Tools). The APT language was the product of the MIT developmental work on NC programming systems. Its development began in June, l956, and it was first used in production around l959. Today it is the most widely used language in the United States. Although first intended as a contouring language, modem versions of APT can be used for both positioning and continuous-path programming in up to five axes. Versions of APT for particular processes include APTURN (for lathe operations), APTMIL (for milling and drilling operations), and APTPOINT (for point-to-point operations).

ADAPT (Adaptation of APT). Several part programming languages are based directly on the APT program. One of these is ADAPT, which was developed by IBM under Air Force contract. It was intended to provide many of the features of APT but to utilize a smaller computer. The full APT program requires a computing system that would have been considered large by the standards of the l96Os. This precluded its use by many small and medium-sized firms that did not have access to a large computer. ADAPT is not as powerful as APT, but it can be used to program for both positioning and contouring jobs.

EXAPT (Extended subset of APT). This was developed in Germany starting around l964 and is based on the APT language. There are three versions:

EXAPT I-designed for positioning (drilling and also straight-cut milling), EXAPT II-designed for turning, and EXAPT III-designed for limited contouring operations. One of the important features of EXAPT is that it attempts to compute optimum feeds and speeds automatically.

UNIAPT. The UNIAPT package represents another attempt to adapt the APT language to use on smaller computers. The name derives from the developer, the United Computing Corp. of Carson, California. Their efforts have provided a limited version of APT to be implemented on minicomputers, thus allowing many smaller shops to possess computer-assisted programming capacity.

SPLIT (Sundstrand Processing Language Internally Translated). This is a proprietary system intended for Sundstrand's machine tools. It can handle up to five-axis positioning and possesses contouring capability as well. One of the unusual

features of SPLIT is that the postprocessor is built into the program. Each machine tool uses its own SPLIT package, thus obviating the need for a special postprocessor.

COMPACT II. This is a package available from Manufacturing Data Systems, Inc. (MDSI), a firm based in Ann Arbor, Michigan. The NC language is similar to SPLIT in many of its features. MDSI leases the COMPACT II system to its users on a time-sharing basis. The part programmer uses a remote terminal to feed the program into one of the MDSI computers, which in turn produces the NC tape. The COMPACT II language is one of the most widely used programming languages. MDSI has roughly 3OOO client companies which use this system.

PROMPT. This is an interactive part programming language offered by Weber N/C System, Inc., of Milwaukee, Wisconsin. It is designed for use with a variety of machine tools, including lathes, machining centers, flame cutters, and punch presses.

CINTURN II. This is a high-level language developed by Cincinnati Milacron to facilitate programming of turning operations.

The most widely used NC part programming language is APT, including its derivatives (ADAPT, EXAPT, UNIAPT, etc.).

THE APT LANGUAGE

In this section we present an introduction to the APT language for computer assisted part programming. Our objectives are to demonstrate the English-like statements of this NC language and to show how they are used to command the cutting tool through its sequence of machining operations.

APT is not only an NC language; it is also the computer program that performs the calculations to generate cutter positions based on APT statements. We will not consider the internal workings of the computer program. Instead, we will concentrate on the language that the part programmer must use.

APT is a three-dimensional system that can be used to control up to five axes. We will limit our discussion to the more familiar three axes, x, y, and z, and exclude rotational coordinates. APT can be used to control a variety of different machining operations. We will cover only drilling and milling applications. There are over 4OO words in the APT vocabulary. Only a small fraction will be covered here. There are four types of statements in the APT language:

1. *Geometry statements*. These define the geometric elements that comprise the workpart. They are also sometimes called definition statements.

2. *Motion statements.* These are used to describe the path taken by the cutting tool.

3. *Postprocessor statements.* These apply to the specific machine tool and control system. They are used to specify feeds and speeds and to actuate other features of the machine.

4. *Auxiliary statements.* These are miscellaneous statements used to identify the part, tool, tolerances, and so on.

Geometry statements

To program in APT, the workpart geometry must first be defined. The tool is subsequently directed to move to the various point locations and along surfaces of the workpart which have been defined by these geometry statements. The definition of the workpart elements must precede the motion statements.

The general form of an APT geometry statement is this:

An example of such a statement is

Pl = POINT/5.O, 4.O, O.O

This statement is made up of three sections. The first is the symbol used to identify the geometric element. A symbol can be any combination of six or fewer alphabetic and numeric characters. At least one of the six must be an alphabetic character. Also, although it may seem obvious, the symbol cannot be one of the APT vocabulary words.

The second section of the geometry statement is an APT vocabulary word that identifies the type of geometry element. Besides POINT, other geometry elements in the APT vocabulary include LINE, PLANE and CIRCLE.

The third section of the geometry statement comprises the descriptive data that define the element precisely, completely, and uniquely. These data may include quantitative dimensional and positional data, previously defined geometry elements,

and other APT words.

The punctuation used in the APT geometry statement is illustrated in the example, Eq. .The statement is written as an equation, the symbol being equated to the surface type. A slash separates the surface type from the descriptive data. Commas are used to separate the words and-numbers in the descriptive data.

There are a variety of ways to specify the different geometry elements. The appendix at the end of this chapter presents a dictionary of APT vocabulary words as well as a sampling of statements for defining the geometry elements we will be using: points, lines, circles, and planes. The reader may benefit from a few examples.

To specify a line, the easiest method is by two points through which the line asses:

L3 = LINE/P3, P4

The part programmer may find it convenient to define a new line parallel to another line which has previously been defined. One way of doing this would be

L4 = LINF/P5, PARLEL, L3

This states that the line L4 must pass through point P5 and be parallel (PARLEL) line L3.

A plane can be defined by specifying three points through which it passes:

PLl = PLANE/Pl, P4, P5

Of course, the three points must not lie along a straight line. A plane can also be defined as being parallel to another plane, similar to the previous line parallelism statement.

PL2 = PLANE/P2, PARLEL, PLl

Plane PL2 is parallel to plane PLl and passes through point P2.

A circle can be specified by its center and its radius.

Cl = CIRCLF/CENTER, Pl, RADIUS, 5.O

The two APT descriptive words are used to identify the center and radius. The orientation of the circle perhaps seems undefined. By convention, it is a circle located in the x-y plane. There are several ground rules that must be followed in formulating an APT geometry statement:

l. The coordinate data must be specified in the order x, y, z. For example, the statement

P1 = POINT/5.O, 4.O, O.O

is interpreted by the APT program to mean a point x = 5.O, y = 4.O, and z = O.O.

2. Any symbols used as descriptive data must have been previously defined. For example, in the statement

P2 = POINT/INTOF, Ll, L2

the two lines Ll and L2 must have been previously defined. In setting up the list of geometry statements, the APT programmer must be sure to define symbols before using them in subsequent statements.

3. A symbol can be used to define only one geometry element. The same symbol cannot be used to define two different elements. For example, the following sequence would be incorrect:

P1 = POINT/l.O, l.O, l.O

P1=POINT/2.O, 3.O,4.O

4. Only one symbol can be used to define any given element. For example, the following two statements in the same program would render the program incorrect:

P1 = POINT/l.O, l.O, l.O n = POINT/l.O, l.O, l.O

5. Lines defined in APT are considered to be of infinite length in both directions. Similarly, planes extend indefinitely and circles defined in APT are complete circles.

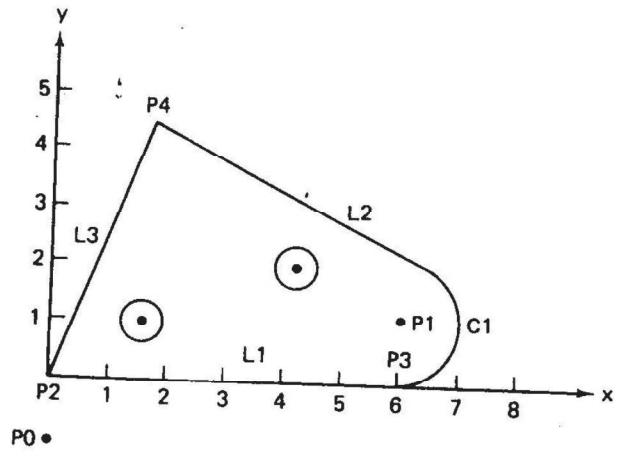

Workpart from previous figure redrawn with x-y coordinate system and geometric elements labeled.

EXAMPLE

To illustrate some of these geometry statements we will define the geometry of the workpart shown in Figure 8.6. The drawing of the part is duplicated in Figure 8.9, except that we have added the coordinate axis system and labeled the various geometric elements. We also add the target point PO to be used in subsequent motion commands.

PO = POINT/O, -l.O, O
Pl = POINT/6.O, l.l25,O
P2 = POINT/O, O, O
P3 = POINT/6.O, O, O
P4 = POINT/l.75, 4.5, O
Ll = LINE/P2, P3
Cl = CIRCLE/CENTER, Pl, RADIUS, l.l25
L2 = LINE/P4, LEFT, TANTO, Cl
L3 = LINE/P2, P4
PLl = PLANE/P2, P3, P4

Motion statements

APT motion statements have a general format, just as the geometry statements do. The general form of a motion statement is motion command/descriptive data.

The statement consists of two sections separated by a slash. The first section is the basic motion command, which tells the tool what to do. The second section is

comprised of descriptive data, which tell the tool where to go. In the example statement above, the tool is commanded to go to point PI, which has been defined in a preceding geometry statement.

At the beginning of the motion statements, the tool must be given a starting point. This point is likely to be the target point, the location where the operator has positioned the tool at the start of the job. The part programmer keys into this starting position with the following statement:

FROM/TARG

The FROM is an APT vocabulary word which indicates that this is the initial point from which others will be referenced. In the statement above, TARG is the symbol given to the starting point. Any other APT symbol could be used to define the target point. Another way to make this statement is

FROM/-2.O, -2.O, O.O

where the descriptive data in this case are the x, y, and z coordinates of the target point. The FROM statement occurs only at the start of the motion sequence.

It is convenient to distinguish between PTP movements and contouring movements when discussing the APT motion statements.

POINT-TO-POINT MOTIONS. There are only two basic PTP motion commands: GOTO and GODLTA. The GOTO statement instructs the tool to go to a particular point location specified in the descriptive data. Two examples would be:

GOTO/P2

GOTO/2.O, 7.O, O.O

In the first statement, P2 is the destination of the tool point. In the second statement, the tool has been instructed to go to the location whose coordinates are x = 2.O, y = 7.O, and z = O.

The GODLTA command specifies an incremental move for the tool. For example, the statement

GODLA/2.O, 7.O, O.O

instructs the tool to move from its present position 2 in. in the x direction and 7 in. in the y direction. The z coordinate remains unchanged.

The GODLTA command is useful in drilling and related operations. The tool can be directed to a particular hole location with the GOTO statement. Then the GODLTA command would be used to drill the hole, as in the following sequence:

```
GOTO/P2
GODLTNO, O, -l.5
GODLTNO, O, + l.5
```

EXAMPLE

Previous example was a PTP job which was programmed manually. Let us write the APT geometry and motion statements necessary to perform the drilling portion of this job. We will set the plane defined by z = O about l/4 in. above the part surface. The part will be assumed to be l/2 in. thick. The reader should refer back to Figures 8.3 and 8.4.

```
Pl = POINT/l.O, 2.O, O
P2 = POINT/l.O, l.O, O
P3 = POINT/3.5, l.5,O
PO=POINT/-l.O, 3.O,2.O
FROM/PO
GOTO/Pl
GODLTA/O, O, -l.O
GODLTA/O, O,+l.O
GOTO/P2
GODLTA/O, O, -l.O
GODLTA/O, O, +l.O
```

GOTO/P3

GODLTA/O, O, -l.O

GODLTA/O, O, +l.O

GOTO/PO

This is not a complete APT program because it does not contain the necessary auxiliary and postprocessor statements. However, the statement sequence demonstrates how geometry and motion statements can be combined to command the tool through a series of machining steps.

CONTOURING MOTIONS. Contouring commands are somewhat more complicated because the tool's position must be continuously controlled throughout the move. To accomplish this control, the tool is directed along two intersecting surfaces as shown in Figure 8.lO. These surfaces have very specific names in APT:

l. *Drive surface*. This is the surface (it is pictured as a plane in Figure 8.lO) that guides the side of the cutter.

2. *Part surface*. This is the surface (again shown as a plane in the figure) on which the bottom of the cutter rides. The reader should note that the "part surface" mayor may not be an actual surface of the workpart. The part programmer must define this plus the drive surface for the purpose of maintaining continuous path control of the tool.

There is one additional surface that must be defined for APT contouring motions:

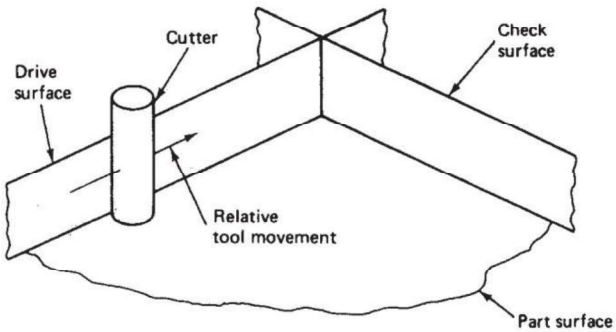

Three surfaces in APT contouring motions which guide the cutting tool.

3. *Check surface.* This is the surface that stops the movement of the tool in its current direction. In a sense, it checks the forward movement of the tool.

There are several ways in which the check surface can be used. This is determined by APT modifier words within the descriptive data of the motion statement. The three main modifier words are TO, ON, and PAST, and their use with regard to the check surface is shown in Figure. A fourth modifier word is TANTO. This is used when the drive surface is tangent to a circular check surface, as illustrated in Figure. In this case the cutter can be brought- to the point of tangency with the circle by use of the TANTO modifier word.

The APT contour motion statement commands the cutter to move along the drive and part surfaces and the movement ends when the tool is at the check surface. There are six motion command words:

GOLFT GOFWD GOUP

GORGT GOBACK GODOWN

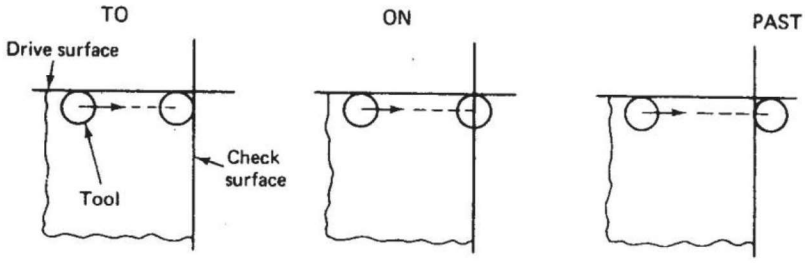

Use of APT modifier words in a motion statement: TO. ON and PAST. TO moves tool into initial contact with check surface. ON moves tool until tool center is on check surface. PAST moves tool just beyond check surface.

Previous figure Use of APT modifier word TANTO. TANTO moves tool to point of tangency between two surfaces, at least one of which is circular.

Their interpretation is illustrated in Figure. In commanding the cutter, the programmer must keep in mind where it is coming from. As the tool reaches the new check surface, does the next movement involve a right turn or an upward turn or what? The tool is directed accordingly by one of the six motion words. In the use of

these words, it is helpful for the programmer to assume the viewpoint that the workpiece remains stationary and the tool is instructed to move relative to the piece. To begin the sequence of motion commands, the FROM statement, Eq. is used in the same manner , as for PTP moves. The statement following the FROM statement defines the initial drive surface, part surface, and check surface. The sequence is of the following form:

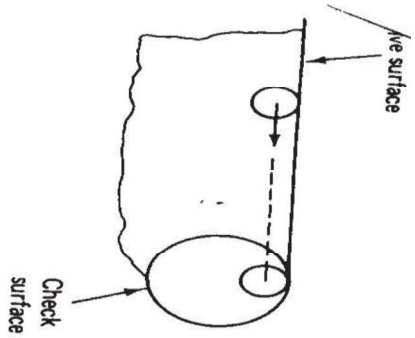

FROM/TARG

GO/TO, PLl, TO, PL2, TO, PL3

The symbol TARG represents the target point where the operator has set up the tool. The GO command instructs the tool to move to the intersection of the drive.

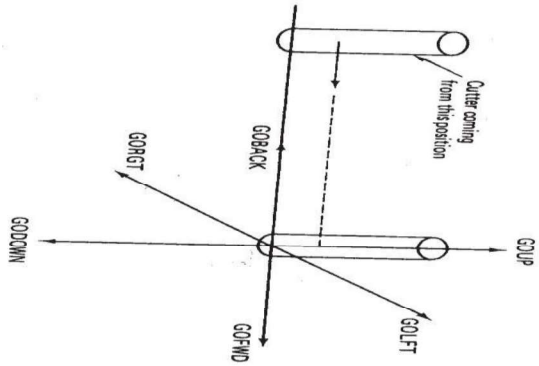

Use of APT motion commands.

surface (PLl), the part surface (PL2), and the check surface (PL3). The periphery of the cutter is tangent to PU and PU, and the bottom of the cutter is

touching Pl2. This cutter location is defined by use of the modifier word TO. The three surfaces included in the GO statement must be specified in the order: drive surface first, part surface second, and check surface last.

Note that the GO/TO command is different from the GOTO command.

GOTO is used only for PTP motions. GO/TO is used to initialize the sequence of contouring motions.

After initialization, the tool is directed along its path by one of the six command words. It is not necessary to repeat the symbol of the part surface after it has been defined. For instance, consider Figure. The cutter has been directed from TARG to the intersection of surfaces PU, PL2, and PU. It is desired to move the tool along plane PL3. The following command would be used:

GORGT/PL3, PAST, PL4

This would direct the tool to move along PL3, using it as the drive surface. The tool would continue until past surface PL4, which is the new check surface. Although the part surface (PL2) may remain the same throughout the motion sequence, the drive surface and check surface are redefined in each new command.

Let us consider an alternative statement to the above which would accomplish the same motion but would lead to easier programming:

GORGT/U, PAST, L4

We have substituted lines L3 and L4 for planes PL3 and PL4, respectively. When looking at a part drawing, such as Figure, the sides of the part appear as lines. On the actual part, they are three-dimensional surfaces, of course. However, it would be more convenient for the part programmer to define these surfaces as lines and circles rather than planes and cylinders. Fortunately, the APT computer program allows the geometry of the part to be defined in this way. Hence the lines L3 and L4 in the foregoing motion statement are treated as the drive surface and check surface. This substitution can only be made when the part surfaces are perpendicular to the x-y plane.

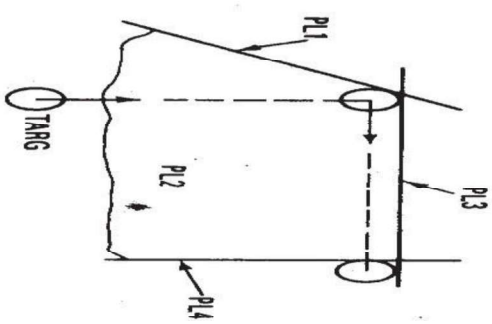

Initialization of APT contouring motion sequence.

EXAMPLE

To demonstrate the use of the motion commands in a contouring sequence, we will refer back to the workpart of Example. The geometry statements were listed in this example for the part shown in Figure . Using the geometric elements shown in this figure, following is the list of motion statements to machine around the periphery of the part. The sequence begins with tool located at the target point PO.

FROM/PO

GO/TO, Ll, TO, PLl, TO, L3

GORGT/Ll, TANTO, Cl

GOFWD/Cl, PAST, L2

GOFWD/L2, PAST, L3

GOLFT/L3, PAST, Ll

GOTO/PO

The reader may have questioned the location of the part surface (PLl) in the APT sequence. For this machining job, the part surface must be defined below the bottom plane of the workpiece in order for the cutter to machine the entire thickness of the piece. Therefore, the part surface is really not a surface of the part at all.

Example raises several other questions: How is the cutter size accounted for in the APT program? How are feeds and speeds specified? These and other questions are answered by the postprocessor and auxiliary statements.

Postprocessor statements

To write a complete part program, statements must be written that control the operation of the spindle, the feed, and other features of the machine tool. These are called postprocessor statements. Some of the common postprocessor statements that appear in the appendix at the end of the chapter are:

COOLNT/	RAPID
END	SPINDL/
FEDRAT/	TURRET/
MACHIN/	

The postprocessor statements, and the auxiliary statements in the following section, are of two forms: either with or without the slash (/). The statements with the slash are self-contained. No additional data are needed. The APT words with the slash require descriptive data after the slash. These descriptions are given for each word in the appendix.

The FEDRAT/ statement should be explained. FEDRAT stands for feed rate and the interpretation of feed differs for different machining operations. In a drilling operation the feed is in the direction of the drill bit axis. However, in an end milling operation, typical for NC, the feed would be in a direction perpendicular to the axis of the cutter.

Auxiliary statements

The complete APT program must also contain various other statements, called auxiliary statements. These are used for cutter size definition, part identification, and so on. The following APT words used in auxiliary statements are defined in the appendix to this chapter:

CLPRNT	INTOL/
CUTTER	OUTTOL/
FINI	PARTNO

The offset calculation of the tool path from the part outline is based on the

CUTTER/definition. For example, the statement

CUTTER/.5OO

would instruct the APT program that the cutter diameter is O.5OO in. Therefore, the tool path must be offset from the part outline by O.25O in.

EXAMPLE

We are now in a position to write a complete APT program. The workpart of Example 8.4 will be used to illustrate the format of the APT program.

We will assume that the workpiece is a low-carbon steel plate, which has previously been cut out in the rough shape of the part outline. The tool is a Y2-in.-diameter end-milling cutter. Typical cutting conditions might be recommended as follows: cutting speed = 573 rpm and feed = 2.29in.lmin.

Figure 8.l5 presents the program with correct character spacing identified at the top as if it were to be keypunched onto computer cards. Modem NC programming systems utilize a CRT terminal for program entry.

THE MACROSTATEMENT IN APT

In the preceding section we described the basic ingredients of the APT language. In the present section we describe a very powerful feature of APT, the MACRO statement. The MACRO feature is similar to a subroutine in FORTRAN and other computer programming languages. It would be used where certain motion sequences would be repeated several times within a program. The purpose in using a MACRO subroutine is to reduce the total number of statements required in the APT program, thus making the job of the part programmer easier and less time

```
Column
1      6   8   10                                                72
PARTNO         EXAMPLE PART
               MACHIN/MILL, 1
               CLPRNT
               INTOL/.001
               OUTTOL/.001
               CUTTER/.500
P0             POINT/0, -1.0, 0
P1             POINT/6.0, 1.125, 0
P2             POINT/0, 0, 0
P3             POINT/6.0, 0, 0
P4             POINT/1.75, 4.5, 0
L1             LINE/P2, P3
C1             CIRCLE/CENTER, P1, RADIUS, 1.125
L2             LINE/P4, LEFT' TANTO, C1
L3             LINE/P2, P4
PL1            PLANE/P2, P3, P4
               SPINDL/573
               FEDRAT/2.29
               COOLNT/ON
               FROM/P0
               GO/TO, L1, TO, PL1, TO, L3
               GORGT/L1, TANTO, C1
               GOFWD/C1, PAST, L2
               GOFWD/L2, PAST, L3
               GOLFT/L3, PAST, L1
               RAPID
               GOTO/P0
               COOLNT/OFF
               FINI
```

APT program for Example

consuming. The MACRO subroutine is defined by a statement of the following format:

symbol = MACRO/parameter definition(s)

The rules for naming the MACRO symbol are the same as for any other APT symbol. It must be six characters or fewer and at least one of the characters must be a letter of the alphabet. The parameter definition(s) following the slash would identify certain variables in the subroutines which might change each time the subroutine was called into use. Equation (8.6) would serve as the title and first line of a MACRO subroutine. It would be followed by the set of APT statements that comprise the subroutine. The very last statement in the set must be the APT word TERMAC. This signifies the termination of the MACRO.

To activate the MACRO subroutine within an APT program, the following call statement would be used: CALL/symbol, parameter specification

The symbol would be the name of the MACRO that is to be called. The parameter specification identifies the particular values of the parameters that are to be used in this execution of the MACRO subroutines.

An example will serve to illustrate the use of the MACRO statement and how the MACRO would be called by the main APT program.

EXAMPLE

We will refer back to the drilling operations of Example. In this example the GODLTA sequence was repeated in the program a total of three times, once for each hole. This represents an opportunity to use the MACRO feature in the APT system. The four point locations (PO, Pl, and P3) would be defined just as they are in Example. These points would be used in the MACRO subroutine and main APT program in the following way:

```
DRILL = MACRO/PX
        GOTO/PX
        GODLTA/O, O, -l.O
        GODLTA/O, O, +l.O
        TERMAC
        FROM/PO
        CALL/DRILL, PX = Pl
        CALL/DRILL, PX = P2
        CALL/DRILL, PX = P3
        GOTO/PO
```

In this example the number of APT motion statements in the main program has been reduced from **ll** down to five. (If we include the MACRO subroutine in our line count, the reduction is from **ll** statements to lO.) The reader can visualize the power of the MACRO feature for a programming job in which there are a large number of holes to be drilled. The savings in the required number of APT statements

would approach $66^{2/3}$% in this case, since one call statement replaces three motion statements in the program.

The MACRO feature has many uses in APT. They are limited primarily by the imagination of the part programmer. Some of these uses will be considered in the exercise problems at the end of the chapter. It is even possible to have a CALL/ statement within one MACRO which refers to another MACRO subroutine. This might be used for example in a matrix of holes where both the x and y positions of the holes are changed with each drilling operation.

UNIT IV
GROUP TECHNOLOGY

INTRODUCTION

Group technology (abbreviated GT) is a manufacturing philosophy in which similar parts are identified and grouped together to take advantage of their similarities in manufacturing and design. Similar parts are arranged into part families. For example, a plant producing lO,OOO different part numbers may be able to group the vast majority of these parts into 5O or 6O distinct families. Each family would possess similar design and manufacturing characteristics. Hence, the processing of each member of a given family would be similar, and this results in manufacturing efficiencies. These efficiencies are achieved in the form of reduced setup times, lower in-process inventories, better scheduling, improved tool control, and the use of standardized process plans. In some plants where GT has been implemented, the production equipment is arranged into machine groups, or cells, in order to facilitate work flow and parts handling.

In product design, there are also advantages obtained by grouping parts into families. For example, a design engineer faced with the task of developing a new part design must either start from scratch or pull an existing drawing from the files and make the necessary changes to conform to the requirements of the new part.

The problem is that finding a similar design may be quite difficult and time consuming. For a large engineering department, there may be thousands of drawings in the files, with no systematic way to locate the desired drawing. As a consequence, the designer may decide that it is easier to start from scratch in developing the new part. This decision is replicated many times over in the company, thus consuming valuable time creating duplicate or near-duplicate part designs. If an effective design-retrieval system were available, this waste could be avoided by permitting the engineer to determine quickly if a similar part already exists. A simple change in an existing design would be much less time consuming than starting from scratch. This design-retrieval system is a manifestation of the group technology principle applied

to the design function. To implement such a system, some form of parts classification and coding is required.

Parts classification and coding is concerned with identifying the similarities among parts and relating these similarities to a coding system. Part similarities are of two types: design attributes (such as geometric shape and size), and manufacturing attributes (the sequence of processing steps required to make the part). While the processing steps required to manufacture a part are usually correlated with the part's design attributes, this is not always the case. Accordingly, classification and coding systems are often devised to allow for differences between a part's design and its manufacture.

Whereas a parts classification and coding system is required in a design-retrieval system, it can also be used in computer-aided process planning (CAPP). Computer-aided process planning involves the automatic generation of a process plan (or route sheet) to manufacture the part. lbe process routing is developed by recognizing the specific attributes of the part in question and relating these attributes to the corresponding manufacturing operations.

In the present chapter we develop the topics of group technology and p classification and coding. In the following chapter we present a discussion of computer-aided process planning and several related issues. Group technology and parts classification and coding are based on the concept of a part family.

PART FAMILIES

A part family is a collection of parts which are similar either because of geometric shape and size or because similar processing steps are required in their manufacture. The parts within a family are different, but their similarities are close enough to merit their identification as members of the part family. Figures show two part families. The two parts shown in Figure are similar from design viewpoint but quite different in terms of manufacturing. The parts shown in Figure might constitute a part family in manufacturing, but their geometry characteristics do Dot permit them to be grouped as a design part family.

The part family concept is central to design-retrieval systems and modify current computer-aided process planning schemes. Another important manufacturing

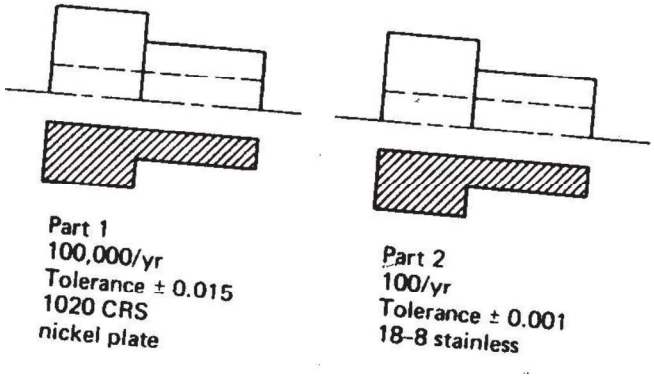

Two parts of identical shape and size but different manufacturing requirements.

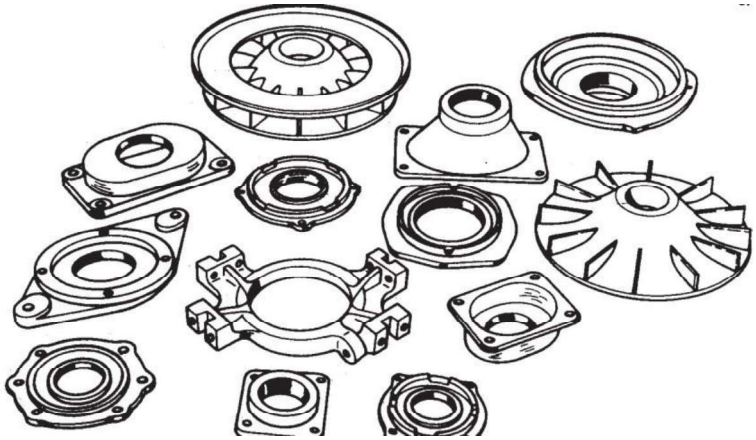

Thirteen parts with similar manufacturing process requirements but different design attributes.

advantage derived from grouping workparts into families can be explained with reference to Figures. Figure shows a process-type layout for batch production in a machine shop. The various machine tools are arranged by function. There is a lathe section, milling machine section, drill press section, and so on. During the machining of a given part, the workpiece must be moved between sections, with perhaps the same section being visited several times. This results in a significant

amount of material handling, a large in-process inventory, usually more setups than necessary, long manufacturing lead times, and high cost. Figure shows a production shop of supposedly equivalent capacity, but with the machines arranged into cells. Each cell is organized to specialize in the manufacture of a particular part family. Advantages are gained in the form of

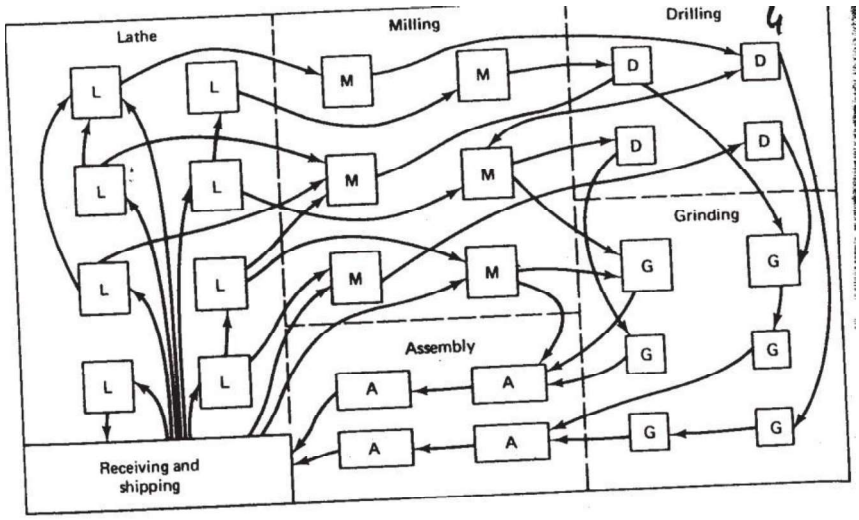

Process-type layout.

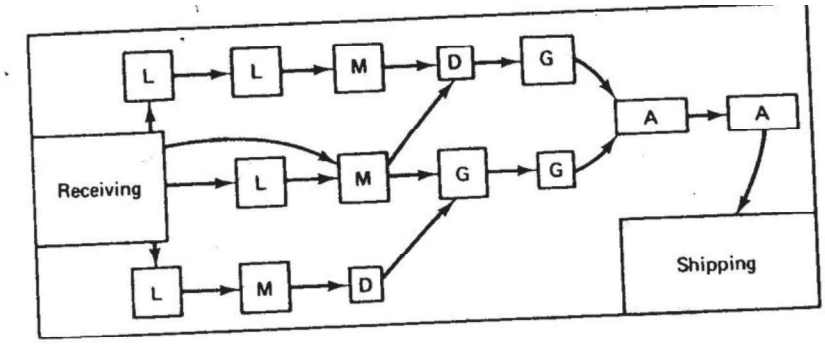

Group technology layout.

reduced workpiece handling, lower setup times, less in-process inventory, less floor space, and shorter lead times. Some of the manufacturing cells can be designed to form production flow lines, with conveyors used to transport workparts between machines in the cell. The biggest single obstacle in changing over to group technology from a traditional production shop is the problem of grouping parts into

families. There are three general methods for solving this problem. All three methods are time consuming and involve the analysis of much data by properly trained personnel. The three methods are:

2. Production flow analysis (PFA)

3. Parts classification and coding system

The visual inspection method is the least sophisticated and least expensive method. It involves the classification of parts into families by looking at either the physical parts or photographs and arranging them into similar groupings. This method is generally considered to be the least accurate of the three.

The second method, production flow analysis, was developed by J. L. Burbidge. PFA is a method of identifying part families and associated machine tool groupings by analyzing the route sheets for parts produced in a given shop. It groups together the parts that have similar operation sequences and machine routings. The disadvantage of PF A is that it accepts the validity of existing route sheets, with no consideration given to whether these process plans are logical or consistent. The production flow analysis approach does not seem to be used much at all in the United States.

The third method, parts classification and coding, is the most time consuming and complicated of the three methods. However, it is the most frequently applied method and is generally recognized to be the most powerful of the three.

PARTS CLASSIFICATION AND CODING

This method of grouping parts into families involves an examination of the individual design and/or manufacturing attributes of each part. The attributes of the part are uniquely identified by means of a code number. This classification and coding may be carried out on the entire list of active parts of the firm, or a sampling process may be used to establish the part families. For example, parts produced in the shop during a certain given time period could be examined to identify part family categories. The trouble with any sampling procedure is the risk that the sample may

be unrepresentative of the entire population. However, this risk may be worth taking, when compared to the relatively enormous task of coding all the company's parts.

Many parts classification and coding systems have been developed throughout the world, and there are several commercially available packages being sold to industrial concerns. It should be noted that none of them has been universally adopted. One of the reasons for this is that a classification and coding system should be custom-engineered for a given company or industry. One system may be best for one company while a different system is more suited to another company.

TABLE Design and Manufacturing Part Attributes Typically Included in a Group Technology Classification System

Part design attributes	
Basic external shape	Major dimensions
Basic internal shape	Minor dimensions
Length/diameter ratio	Tolerances Material
type	Surface finish
Part function	
Part manufacturing attributes	
Major process	Operation sequence
Minor operations	Production time
Major dimensions	Batch size
Length/diameter ratio	Annual production
Surface finish	Fixtures needed
Machine tool	Cutting tools

Design systems versus manufacturing systems

Parts classification and coding systems divide themselves into one of three general categories:

1. Systems based on part design attributes

2. Systems based on part manufacturing attributes

3. Systems based on both design and manufacturing attributes

Systems in the first category are useful for design retrieval and to promote design standardization. Systems in the second category are used for computer-aided process planning, tool design, and other production-related functions. The third category represents an attempt to combine the functions and advantages of the other two systems into a single classification scheme. The types of design and manufacturing parts attributes typically included in classification schemes are listed in Table. It is clear that there is a certain amount of overlap between the design and manufacturing attributes of a part.

Coding system structure

A parts coding scheme consists of a sequence of symbols that identify the part' design and/or manufacturing attributes. The symbols in the code can be al numeric, all alphabetic, or a combination of both types. However, most of the common classification and coding systems use number digits only. There are basic code structures used in group technology applications:

l. Hierarchical structure

2. Chain-type structure

3. Hybrid structure, a combination of hierarchical and chain-type structures

With the hierarchical structure, the interpretation of each succeeding symbol depends on the value of the preceding symbols. Other names commonly used for this structure are monocode and tree structure. The hierarchical code provides a relatively compact structure which conveys much information about the part in a limited number of digits.

In the chain-type structure, the interpretation of each symbol in the sequence is fixed and does not depend on the value of preceding digits. Another name commonly given to this structure is polycode. The problem associated with polycodes is that they tend to be relatively long . On the other hand, the use of a polycode allows for convenient identification of specific part attributes. This can be helpful in recognizing parts with similar processing requirements.

To illustrate the difference between the hierarchical structure and the chain type structure, consider a two-digit code, such as 15 or 25. Suppose that the first digit

stands for the general part shape. The symbol **1** means round workpart and 2 means flat rectangular geometry. In a hierarchical code structure, the interpretation of the second digit would depend on the value of the first digit. If preceded by **1**, the 5 might indicate some length/diameter ratio, and if preceded by 2, the 5 might be interpreted to specify some overall length. In the chain-type code structure, the symbol 5 would be interpreted the same way regardless of the value of the first digit. For example, it might indicate overall part length, or whether the part is rotational or rectangular.

Most of the commercial parts coding systems used in industry are a combination of the two pure structures. The hybrid structure is an attempt to achieve the best features of monocodes and polycodes. Hybrid codes are typically constructed as a series of short polycodes. Within each of these shorter chains, the digits are independent, but one or more symbols in the complete code number are used to classify the part population into groups, as in the hierarchical structure. This hybrid coding seems to best serve the needs of both design and production.

THREE PARTS CLASSIFICATION AND CODING SYSTEMS

When implementing a parts classification and coding system, most companies elect to purchase a commercially available package rather than develop their own. Inyong Ham recommends that the following factors be considered in selecting a parts coding and classification system:

Objective. The prospective user should first define the objective for the system. Will it be used for design retrieval or part-family manufacturing or both?

Scope and application. What departments in the company will use the system? What specific requirements do these departments have? What kinds of information must be coded? How wide a range of products must be coded? How complex are the parts, shapes, processes, tooling, and so forth?

Costs and time. The company must consider the costs of installation, training, and maintenance for their parts classification and coding system. Will there be consulting fees, and how much? How much time will be required to install the system and train the staff to operate and maintain it? How long will it be before the benefits of the system are realized?

Adapability to other systems. Can the classification and coding system be readily adapted to the existing company computer systems and data bases? Can it be readily integrated with other existing company procedures, such as process planning, NC programming, and production scheduling?

Management problems. It is important that all involved management personnel be informed and supportive of the system. Also, will there be any problems with the union? Will cooperation and support for the system be obtained from the various departments involved?

In the sections below, we review three parts classification and coding systems which are widely recognized among people familiar with GT:

i . Opitz system

2. MICLASS system

3. CODE system

The Opitz classification system

This parts classification and coding system was developed by H. Opitz of the University of Aachen in West Germany. It represents one of the pioneering efforts in the group technology area and is perhaps the best known of the classification and coding schemes.

The Opitz coding system uses the following digit sequence:

l2345 6789 ABCD

The basic code consists of nine digits, which can be extended by adding four more digits. The first nine digits are intended to convey both design and manufacturing data. The general interpretation of the nine digits is indicated in Figure. The first five digits, l2345, are called the "form code" and describe the primary design attributes of the part. The next four digits, 6789, constitute the supplementary code.

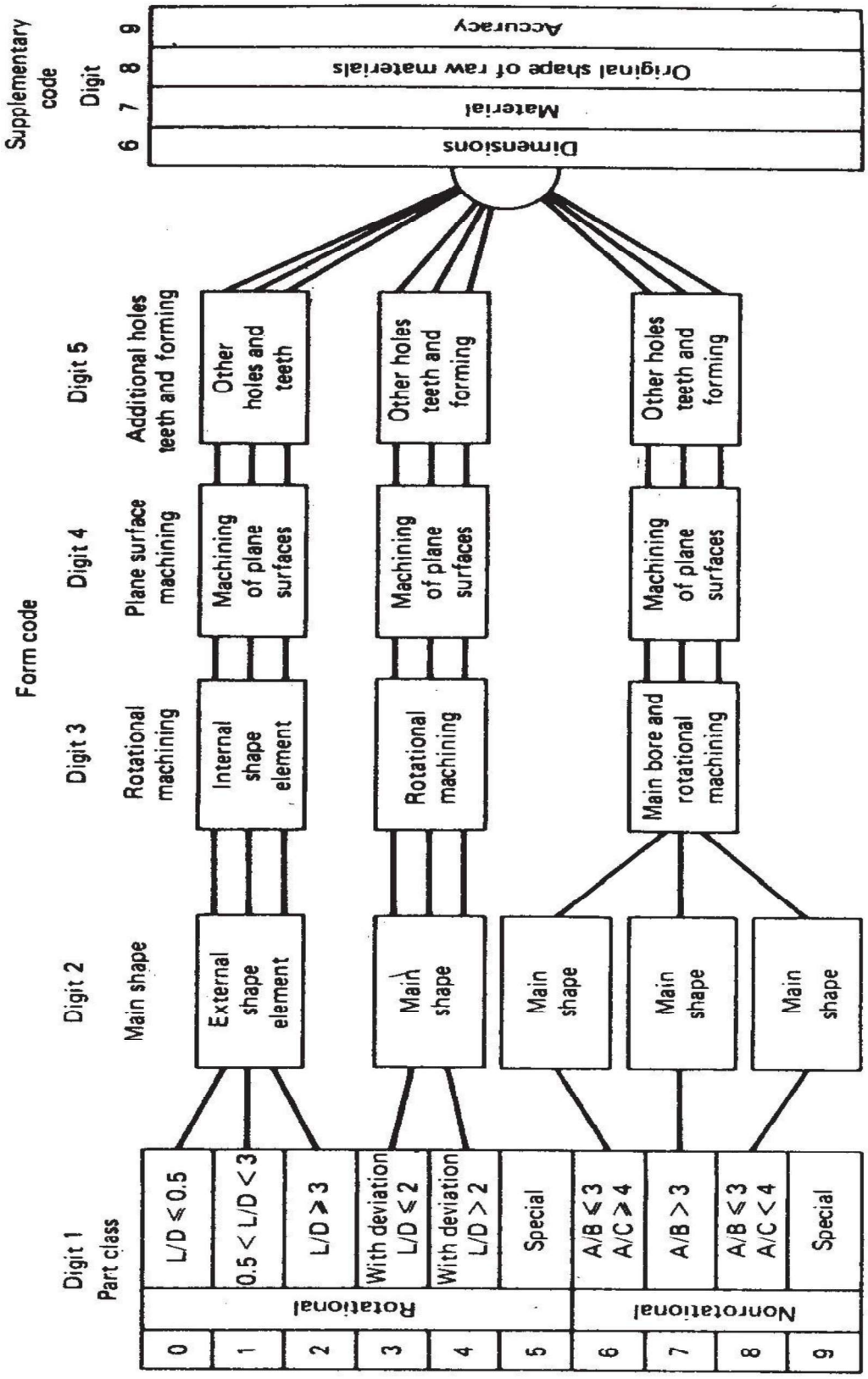
Digit 1
Part class
Digit 2
Main shape
Digit 3
Rotational machining
Digit 4
Plane surface machining
Digit 5
Additional holes teeth and forming
Form code
Supplementary code
Digit
0
1
2
3
4
5
6
7
8
9
Rotational
Nonrotational
L/D ≤ 0.5
0.5 < L/D < 3
L/D ≥ 3
With deviation L/D ≤ 2
With deviation L/D > 2
Special
A/B ≤ 3 A/C ≥ 4
A/B > 3
A/B ≤ 3 A/C < 4
Special
External shape element
Main shape
Main shape
Main shape
Main shape
Internal shape element
Rotational machining
Main bore and rotational machining
Machining of plane surfaces
Machining of plane surfaces
Machining of plane surfaces
Other holes and teeth
Other holes teeth and forming
Other holes teeth and forming
Dimensions
Material
Original shape of raw materials
Accuracy

It indicates some of the attributes that would be of use to manufacturing (dimensions, work material, starting raw workpiece shape and accuracy). The extra four digits, ABCD, are referred to as the "secondary code" and are intended to identify the production operation type and sequence. The secondary code can be designed by the firm to serve its own particular needs.

The complete coding system is too complex to provide a comprehensive description here. Opitz wrote an entire book on his system [l2]. However, to obtain a general idea of how the Opitz system works, let us examine the first five digits of the code, the form code. The first digit identifies whether the part is a rotational or a non rotational part. It also describes the general shape and proportions of the part. We will limit our survey to rotational parts possessing no unusual features, those with code values O, l, or 2. See Figure for definitions. For this general class of workparts, the coding of the first five digits is given in Figure. An example will demonstrate the coding of a given part.

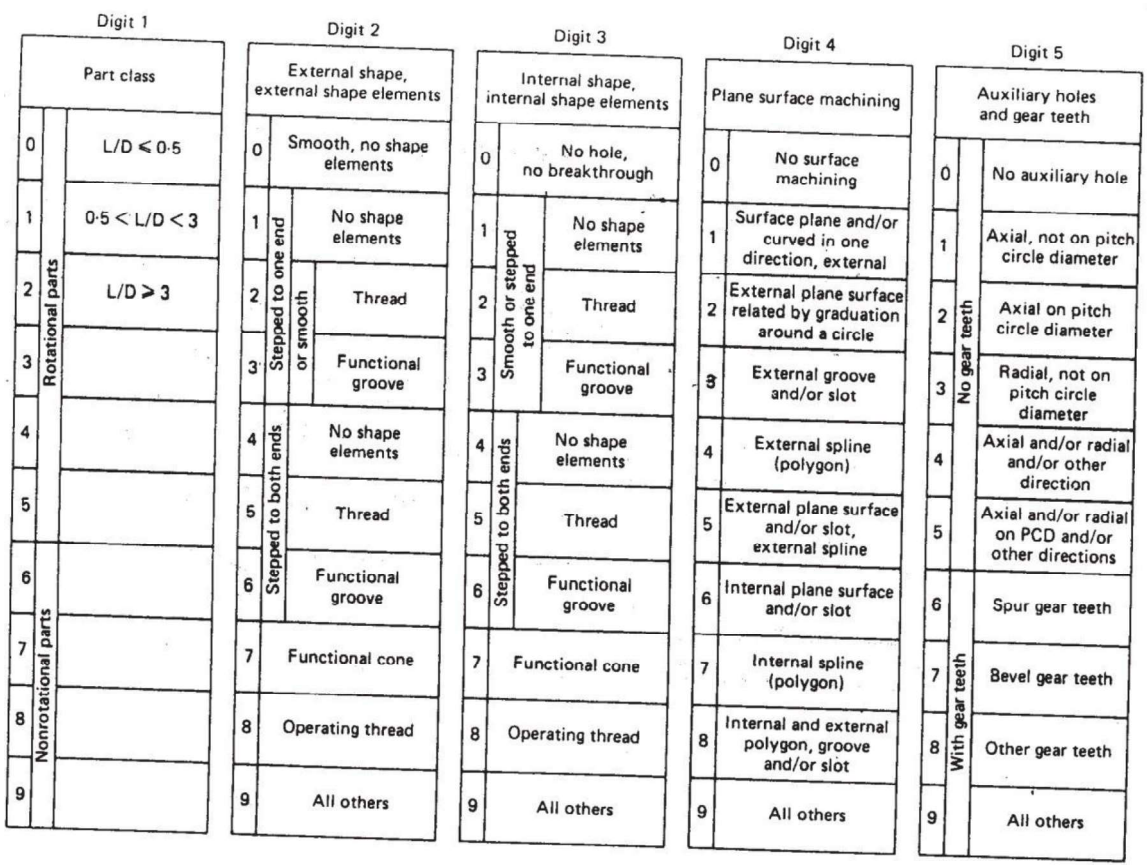

The MICLASS System

MICLASS stands for Metal Institute Classification System and was developed by TNO, the Netherlands Organization for Applied Scientific Research. It was started in Europe about five years before being introduced in the United States in l974. Today, it is marketed in the United States by the Organization for Industrial Research in Waltham, Massachussets. The MICLASS system was developed to help automate and standardize a number of design, production, and management functions. These include:

Standardization of engineering drawings

Retrieval of drawings according to classification number

Standardization of process routing

Automated process planning

Selection of parts for processing on particular groups of machine tools

Machine tool investment analysis

The MICLASS classification number can range from l2 to 3O digits. The first l2 digits are a universal code that can be applied to any part. Up to l8 additional digits can be used to code data that are specific to the particular company or industry. For example, lot size, piece time, cost data, and operation sequence might be included in the l8 supplementary digits.

The workpart attributes coded in the first l2 digits of the MICLASS number are as follows:

lst digit	Main shape
2nd and 3rd digits	Shape elements
4th digit	Position of shape elements
5th and 6th digits	Main dimensions
7th digit	Dimension ratio
8th digit	Auxiliary dimension

9th and lOth digits	Tolerance codes
llth and l2th digits	Material codes

The CODE system

The CODE system is a parts classification and coding system developed and marketed by Manufacturing Data Systems, Inc. (MDSI), of Aim Arbor, Michigan. Its most universal application is in design engineering for retrieval of part design data, but it also has applications in manufacturing process planning, purchasing, tool design, and inventory control.

The CODE number has eight digits. For each digit there are l6 possible values (zero through 9 and A through F) which are used to describe the part's design and manufacturing characteristics. The initial digit position indicates the basic geometry of the part and is called the Major Division of the CODE system. This digit would be used to specify whether the shape was a cylinder, flat piece, block, or other. The interpretation of the remaining seven digits depends on the value of the first digit, but these remaining digits form a chain-type structure. Hence the CODE system possesses a hybrid structure.

BENEFITS OF GROUP TECHNOLOGY

Although group technology is expected to be an important principle in future production plants, it has not yet achieved the widespread application which might be expected. There are several reasons for this. First, as we have already indicated, there is the problem of rearranging the machines in the plant into GT cells. Many companies have been inhibited from adopting group technology because of the expense and disruption associated with this transition to GT machine cells. Second, there is the problem of identifying part families among the many components produced in the plant. Usually associated with this problem is the expense of parts classification and coding. Not only is this procedure expensive, but it also requires a considerable investment in time and personnel resources. Managers often feel that these limited resources can better be allocated to other projects than group technology with its uncertain future benefits. Finally, it is common for companies to encounter a general resistance among its operating personnel when changeover to a new system is contemplated.

When these problems are solved and group technology is applied, the company will typically realize benefits in the following areas:

Product design

Tooling and setups

Materials handling

Production and inventory control

Employee satisfaction

Process planning procedures

COMPUTER-AIDED PROCESS PLANNING

THE PLANNING FUNCTION

This chapter examines several process planning functions which can be implemented by computer systems. Process planning is conerned with determining the sequence of individual manufacturing operations needed to produce a given part or product. The resulting operation sequence is documented on a form typically referred to as a route sheet. The route sheet is a listing of the production operations and associated machine tools for a workpart or assembly.

Closely related to process planning are the functions of determining appropriate cutting conditions for the machining operations and setting the time standards for the operations. All three functions-planning the process, determining the cutting conditions, and setting the time standards-have traditionally been carried out as tasks with a very high manual and clerical content. They are also typically routine tasks in which similar or even identical decisions are repeated over and over. Today, these kinds of decisions are being made with the aid of computers. In the first four sections of this chapter we consider the process planning function and how computers can be used to perform this function.

Traditional process planning

There are variations in the level of detail found in route sheets among different companies and industries. In the one extreme, process planning is accomplished by releasing the part print to the production shop with the instructions

make to drawing. Most firms provide a more detailed list of steps describing each operation and identifying each work center. In any case, it is traditionally the task of the manufacturing engineers or industrial engineers in an organization to write these process plans for new part designs to be produced by the shop. The process planning procedure is very much dependent on the experience and judgment of the planner. It is the manufacturing engineer's responsibility to determine an optimal routing for each new part design. However, individual engineers each have their own opinions about what constitutes the best routing. Accordingly, there are differences among the operation sequences developed by various planners. We can illustrate rather dramatically these differences by means of an example.

In one case cited, a total of 42 different routings were developed for various sizes of a relatively simple part called an "expander sleeve." There were a total of 64 different sizes and styles, each with its own part number. The 42 routings included 2O different machine tools in the shop. The reason for this absence of process standardization was that many different individuals had worked on the parts: 8 or 9 manufacturing engineers, 2 planners, and 25 NC part programmers. Upon analysis, it was determined that only two different routings through four machines were needed to process the 64 part numbers. It is clear that there are potentially great differences in the perceptions among process planners as to what constitutes the "optimal" method of production.

In addition to this problem of variability among planners, there are often difficulties in the conventional process planning procedure. New machine tools in the factory render old routings less than optimal. Machine breakdowns force shop personnel to use temporary routings, and these become the documented routings even after the machine is repaired. For these reasons and others, a significant proportion of the total number of process plans used in manufacturing are not optimal.

Automated process planning

Because of the problems encountered with manual process planning, attempts have been made in recent years to capture the logic, judgment, and experience required for this important function and incorporate them into computer programs. Based on the characteristics of a given part, the program automatically generates the manufacturing operation sequence. A computer-aided process planning

(CAPP) system offers the potential for reducing the routine clerical work of manufacturing engineers. At the same time, it provides the opportunity to generate production routings which are rational, consistent, and perhaps even optimal. Two alternative approaches to computer-aided process planning have been developed. These are:

l. Retrieval-type CAPP systems (also called variant systems)

2. Generative CAPP systems

The two types are described in the following two sections.

RETRIEVAL - TYPE PROCESS PLANNING SYSTEMS

Retrieval-type CAPP systems use parts classification and coding and group technology as a foundation. In this approach, the parts produced in the plant are grouped into part families, distinguished according to their manufacturing characteristics. For each part family, a standard process plan is established. The standard process plan is stored in computer files and then retrieved for new workparts which belong to that family. Some form of parts classification and coding system is required to organize the computer files and to permit efficient retrieval of the appropriate process plan for a new workpart. For some new parts, editing of the existing process plan may be required. This is done when the manufacturing requirements of the new part are slightly different from the standard. The machine routing may be the same for the new part, but the specific operations required at each machine may be different. The complete process plan must document the operations as well as the sequence of machines through which the part must be routed. Because of the alterations that are made in the retrieved process plan, these CAPP systems are sometimes also called by the name' 'variant system."

Figure will help to explain the procedure used in a retrieval process planning system. The user would initiate the procedure by entering the part code number at a computer terminal. The CAPP program then searches the part family matrix file to determine if a match exists. If the file contains an identical code number, the standard machine routing and operation sequence are retrieved from the respective computer files for display to the user. The standard process plan is examined by the user to permit any necessary editing of the plan to make it

compatible with the new part design. After editing, the process plan formatter prepares the paper document in the proper form.

If an exact match cannot be found between the code numbers in the computer file and the code number for the new part, the user may search the machine routing file and the operation sequence file for similar parts that could be used to develop the plan for the new part. Once the process plan for a new part code number has been entered, it becomes the standard process for future parts of the same classification.

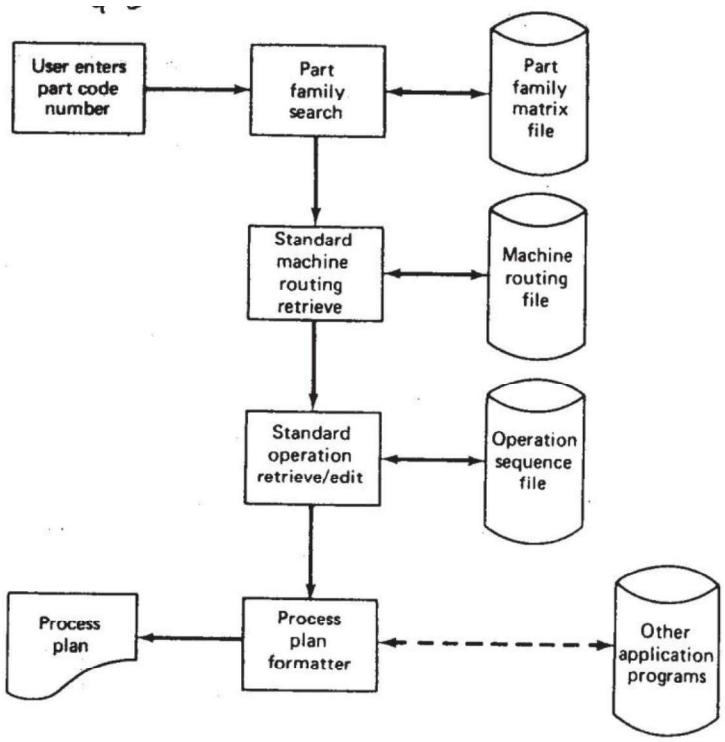

Information flow in a retrieval-type computer-aided process planning system.

In Figure the machine routing file is distinguished from the operation sequence file to emphasize that the machine routing may apply to a range of different part families and code numbers. It would be easier to find a match in the machine routing file than in the operation sequence file. Some CAPP retrieval sys• terns would use only one such file which would be a combination of operation sequence file and machine routing file.

The process plan formatter may use other application programs. These could include programs to compute machining conditions, work standards, and standard costs. Standard cost programs can be used to determine total product costs for pricing purposes.

A number of retrieval-type computer-aided process planning systems have been developed. These include MIPLAN, one of the MICLASS modules [6,2O] the CAPP system developed by Computer-Aided Manufacturing-International [l], COMCAPP V by MDSI, and systems by individual companies [lO]. We will use MIPLAN as an example to illustrate these industrial systems.

GENERATIVE PROCESS PLANNING SYSTEMS

Generative process planning involves the use of the computer to create an individual process plan from scratch, automatically and without human assistance. The computer would employ a set of algorithms to progress through the various technical and logical decisions toward a final plan for manufacturing. Inputs to the ~ tern would include a comprehensive description of the workpart. This may involve the use of some form of part code number to summarize the workpart data, but does not involve the retrieval of existing standard plans. Instead, the general CAPP system synthesizes the design of the optimum process sequence, based an analysis of part geometry, material, and other factors which would influence manufacturing decisions.

In the ideal generative process planning package, any part design could presented to the system for creation of the optimal plan. In practice, cu generative-type systems are far from universal in their applicability. They ter fall short of a truly generative capability, and they are developed for a some limited range of manufacturing processes.

We will illustrate the generative process planning approach by means system called GENPLAN developed at Lockheed-Georgia Company

BENEFITS OF CAPP

Whether it is a retrieval system or a generative system, computer-aided process planning offers a number of potential advantages over manually oriented process planning.

l. *Process rationalization*. Computer-automated preparation of operation routings is more likely to be consistent, logical, and optimal than its manual counterpart. The process plans will be consistent because the same computer software is being used by all planners. We avoid the tendency for drastically different process plans from different planners. The process plans tend to be more logical and optimal because the company has presumably incorporated the experience and judgment of its best manufacturing people into the process planning computer software.

2. *Increased productivity of process planners*. With computer-aided process planning, there is reduced clerical effort, fewer errors are made, and the planners have immediate access to the process planning data base. These benefits translate into higher productivity of the process planners. One system was reported to increase productivity by 6OO% in the process planning function [lO].

3. *Reduced turnaround time*. Working with the CAPP system, the process planner is able to prepare a route sheet for a new part in less time compared to manual preparation. "Ibis leads to an overall reduction in manufacturing lead time.

4. *Improved legibility*. The computer-prepared document is neater and easier to read than manually written route sheets. CAPP systems employ standard text, which facilitates interpretation of the process plan in the factory.

5. *Incorporation of other application programs*. The process planning system can be designed to operate in conjunction with other software packages to automate many of the time-consuming manufacturing support functions.

Mono code or Hierarchical code

The structure of these codes is like a tree in which each symbol is qualified by the preceding characters. Figure 7.1 depicts the monocode generation scheme. The first digit (from 0 to 9) divides the set of parts into major groups such as sheet metal parts, machined parts, purchased parts, and raw materials, and so forth. The second subsequent digits further partition the set into subgroups for each of these groups. For example, the second digit partitions the machined parts into rotational (0) and nonrotational (1) parts. Consider a code 100 in figure 7.1. It represents a machined rotational part with a length to diameter ratio of less than 0.5. The digit 1 in the first place of code has different meaning and different information. Therefore, the digits in a monocode cannot be interpreted

independently; the interpretation depends on the information contained in the preceding symbol.

Advantage:

It can represent a large amount of information with very few code positions.

The hierarchical nature of the code makes it useful for storage and retrieval of design related information such as geometry, material, and size as depicts in figure7.1.

Disadvantage:

A drawback is related to the complexity of the coding system.

The applicability of these codes in manufacturing is limited, as it is difficult to cover information on manufacturing sequences in hierarchical manner.

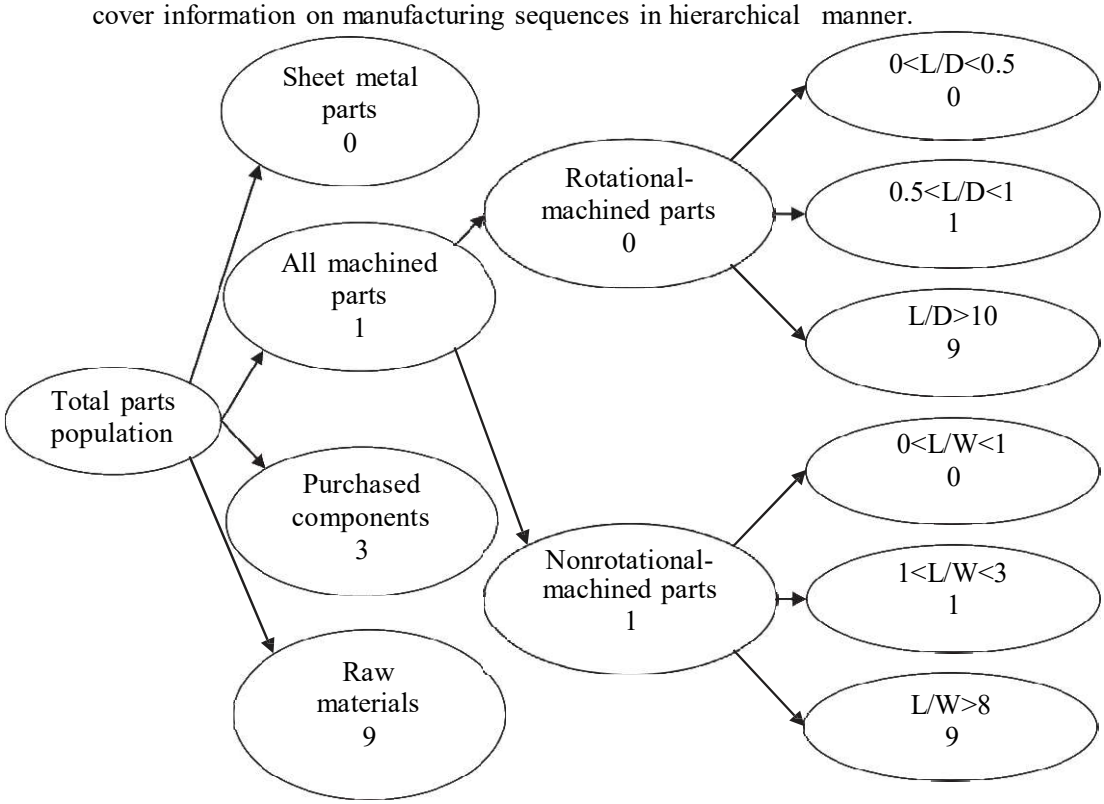

Figure Example of Monocode.

Chain code or Poly code

In polycode the code symbols are independent of each other. Each digit in specific location the code represents a distinct bit of information. A chain-structured

coding scheme is presented. Numeral 3 in the third position always means axial and cross hole no matter what numbers are given to position 1 and 2.

Advantages:

Chain codes are compact and are much easier to construct and use.

Disadvantage:

They cannot be as detailed as hierarchical structures with the same number of coding digits.

Digit position	1	2	3	4
Class of features	External shape	Internal shape	Holes	…
Possible value				
1	Shape 1	Shape 1	Axial	…
2	Shape 1	Shape 1	cross	…
3	Shape 1	Shape 1	Axial and cross	…
.	.	.	.	.
.	.	.	.	.

Chain structure

Mixed code or Hybrid code

Mixed code is mixture of the hierarchical code and chain code (Figure 7.2). It retains the advantage of both mono and chain code. Therefore, most existing code system uses a mixed structure. One good example is widely used optiz code

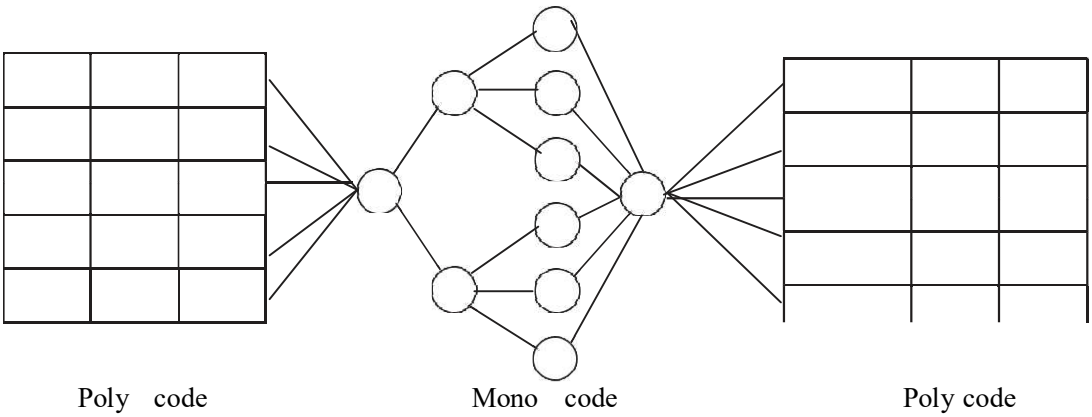

Figure: A hybrid structure

Group Technology Coding Systems

Too much information regarding the components sometimes makes the decision very difficult proposition. It would be better to provide a system with an abstract kind of thing, which can summarize the whole system with the necessary information without giving great details.

Group technology (GT) is a fitting tool for this purpose. Coding, a GT technique, can be used to model a component with necessary information. When constructing a coding system for a component‘s representation, there are several factors need to be considered. They include

The population of components (i.e. rotational, prismatic, deep drawn, sheet metal, and so on)

Detail in the code.

The code structure.

The digital representation (i.e. binary, octal, decimal, alphanumeric, hexadecimal, and so on).

In component coding, only those features are included which are variant in nature. When a coding scheme is designed the two criteria need to be fulfilled (1) unambiguity (2) completeness.

We can define coding as a function of F that maps components from a population space P into a coded space C (Figure 7.3). Unambiguity of a code can be defined (for component j) as

j P only one i C i = F (j)... (1)

Completeness can be defined as j P i C i = F (j)... (2)

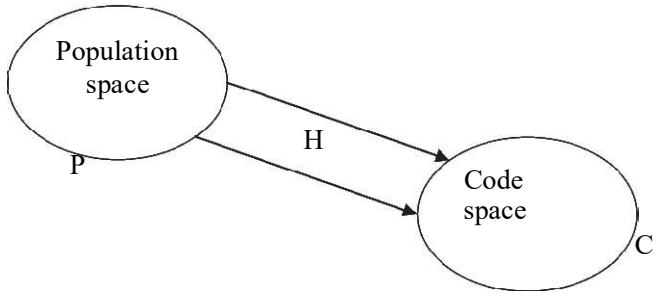

Figure: Mapping from a population space to a code space

The two properties suggest that each component in a population has its own unique code.

However, if two codes are complete and unambiguous, the one having more conciseness is opted whereas a longer code is normally necessary whenever more detail is required e.g. in basic optiz code system and the KK-3, former one uses 5 digits to describe the shape of the component. 5 digits can represent 10^5 combinations. With this set, it is quite difficult to show all the details of a component. So, KK-3 of Japan (Japan society, 1980), which has 21 digits and contains multiple digits for single feature, and MICLASS of TNO (Houtzeel and Schilperoort, 1976), which has a 12-digit code, is used.

Code contents

When using a code to represent an engineering design, it is important that it represents the basic features of the design such as shape, size, tolerance, critical dimensions, material, and so on. For process planning, it is desired to have codes that can distinguish unique production families. Because a coding system transforms the properties and requirements of a design into a code, the aforementioned informations must be provided to the process planning system.

The length of a part code dictates the detail that is captured by the code. In general, the longer the code, the more detail that can be extracted. However, length and details of the code depend on the specific application, in industrial use for product mix.

The optiz system

The Optiz coding is most likely the best-known coding system. It was developed by H. optiz of the Aachen Tech University in West Germany. The code uses a hybrid structure. However, except the first digit, it resembles a chain structure more closely. It has following advantages over the existing system

It is nonproprietary.

It is widely used.

It provides a basic framework for understanding the classification and coding process.

It can be applied to machined parts, non-machined parts, and purchased parts.

It considers both design and manufacturing information.

The optiz code consists of a form code and supplementary code (Figure 7.4). The form code can represent parts of the following variety: long, short, cubic, flat, rotational etc. A

dimension ratio is further used in classifying the geometry: the length/diameter ratio is used to classify the rotational components and the length/height ratios are used to classify Nonrotational components. The attributes of rotational parts are described as shown in table 7.2. The optiz form code uses five digits that focuse on 1) component class 2) basic shape 3) rotational-surface machining 4) plane surface machining 5) auxiliary holes, gear teeth, and forming.

A supplementary code is a polycode consisting four digits is usually appended to the Optiz system.

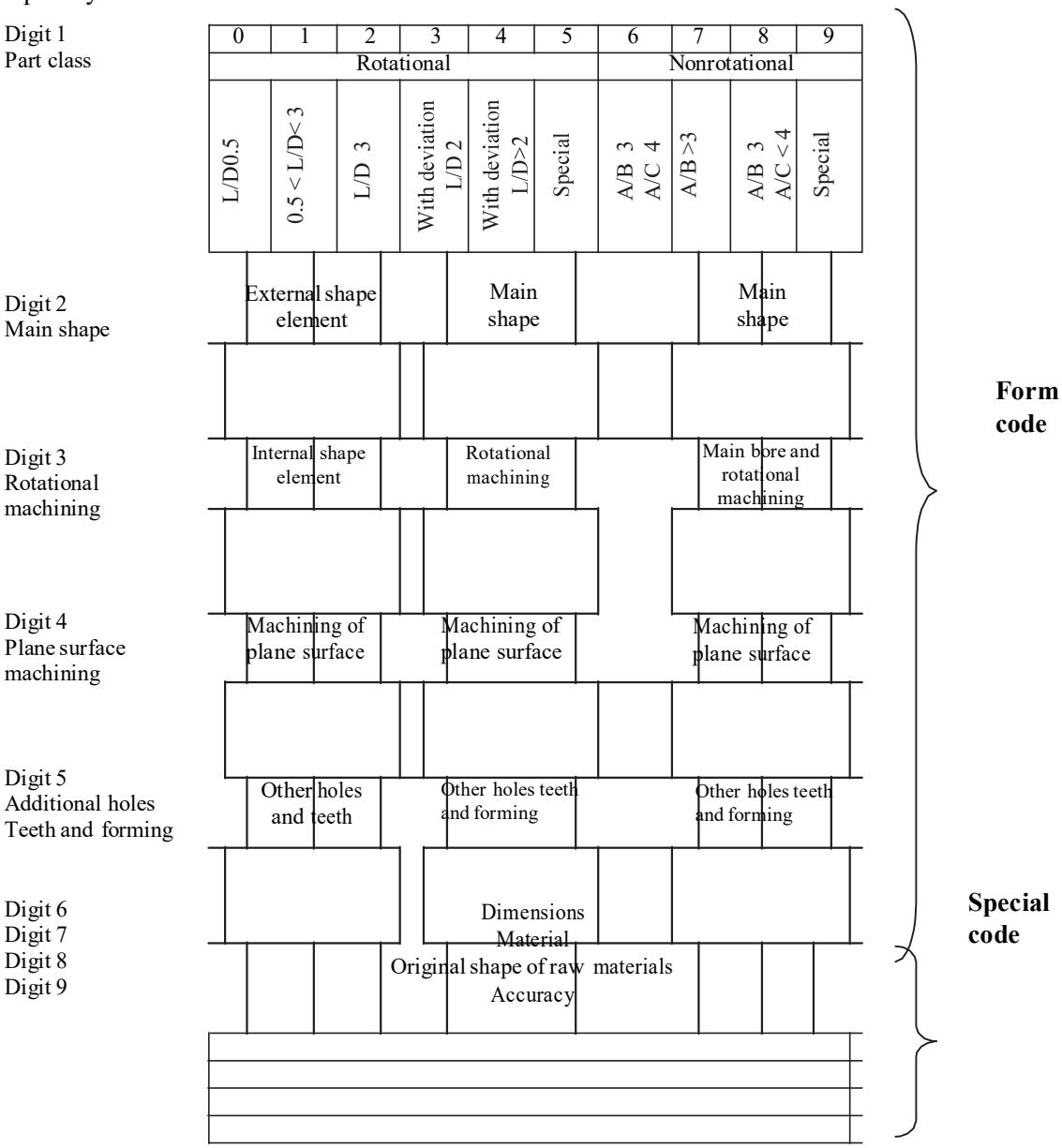

Figure: Basic structure of optiz code

Form code (digit 1-5) for rational parts in the optiz system. Part classes 0, 1, and 2.

Digit 1

Part class		
0	Rotational parts	L/D ≤ 0.5
1		0.5 < L/D < 3
2		L/D ≥ 3
3		
4		
5		
6		
7	Nonrotational parts	
8		
9		

Digit 2

External shape, external shape element		
0	Smooth no shape element	
1	Stepped at one end	No shape element
2		Smooth thread
3		Smooth functional groove
4	Stepped at both end	No shape element
5		Thread
6		Functional groove
7	Functional cone	
8	Operating thread	
9	All others	

Digit 3

Internal shape, internal shape element		
0	No hole, no breakthrough	
1	Smooth or stepped to one end	No shape element
2		Thread
3		Functional groove
4	Stepped at both end	No shape element
5		Thread
6		Functional groove
7	Functional cone	
8	Operating thread	
9	All others	

Digit 4

Plane surface machining	
0	No surface machining
1	Surface plane and/or curved in one direction
2	External plane surface related by graduation around a circle
3	External groove and/or slot
4	External spline (polygon)
5	External plane surface and/or slot, external spline
6	Internal plane surface and/or slot
7	Internal spline (polygon)
8	Internal and external polygon, groove and/or slot
9	All others

Digit 5

Auxiliary holes and gear teeth		
0	no gear teeth	No auxiliary hole
1		Axial, not on pitch circle diameter
2		Axial on pitch circle diameter
3		Radial, not on pitch circle diameter
4		Axial and/or radial and/or other direction
5		Axial and/or radial on pitch circle diameter and/or other direction
6	With gear teeth	spur gear teeth
7		Bevel gear teeth
8		Other gear teeth
9		All others

(continued)

Table 7.2 (continued)

Digit 1 — Component class

	Rotational component	
3		L/D ≤ 2 With Deviation
4		L/D > 2 With deviation

Digit 2 — Overall Shape

0	Around one axis, no segment	Hexagonal bar
1		Square or other regular polygonal section
2		Symmetrical cross section producing no unbalance
3		Cross section other than 0 to 2
4	Segments after rotational machining	
5	Segments before rotational machining	
6	Around more than	Rotational components with curved axis
7		Rotational components with two or more parallel axis
8		Rotational components with intersecting axis
9	Others	

Digit 3 — Rotational machining

0	No rotational machining	
1	External shape	No shape element
2		Thread
3	Internal shape	Functional groove
4		No shape element
5		Thread
6	External and internal shape	machine d
7		Screw threads
8	External shape element	
9	Other shape element	

Digit 4 — Plane surface machining

0	No surface machining
1	external plane and/or curved in one direction
2	External plane surface related by graduation around a circle
3	External groove and/or slot
4	External spline (polygon)
5	External plane surface and/or slot, external spline
6	Internal plane surface and/or slot
7	Internal spline (polygon)
8	Internal and external polygon, groove and/or slot
9	Others

Digit 5 — Auxiliary holes, gear teeth, and forming

0	No auxiliary hole, gear teeth and forming		
1	No forming, no gear teeth	Axial hole(s) not related by drilling pattern	
2		Holes, axial and/or radial and/or in other directions, not related	
3		Related by a drilling pattern	Axial holes
4			Holes axial and/or radial and/or in other
5	Forming, no gear teeth	Formed no auxiliary hole	
6		Formed with auxiliary hole(s)	
7	Gear teeth, no auxiliary hole		
8	Gear teeth with auxiliary hole (s)		
9	Others		

Digit 1			Digit 2		Digit 3		Digit 4	
Diameter D or edge length A			Material		Initial form		Accuracy in coded digits	
	mm	Inches						
0	≤ 20	≤ 0.8	0	Cast iron	0	Round bar, black	0	No accuracy specified
1	> 20 ≤ 50	> 0.8 ≤ 2.0	1	Modular graphitic cast iron and malleable cast iron	1	Round bar, bright drawn	1	2
2	> 50 ≤ 100	> 2.0 ≤ 4.0	2	Mild steel ≤ 26.5 tonf/in.^{2} Not heat treated	2	Bar: triangular, square, hexagonal, others	2	3
3	> 100 ≤ 160	> 4.0 ≤ 6.5	3	Hard steel > 26.5 tonf/ in.^{2} heat treatable low-carbon and case-hardening steel, not heat treated	3	Tubing	3	4
4	> 160 ≤ 250	> 6.5 ≤ 10.0	4	Steel 2 and 3 heat treated	4	Angle, U-, T- , and similar sections.	4	5
5	> 250 ≤ 400	>10.0≤ 16.0	5	Alloy steel (not heat treaded)	5	Sheet	5	2 and 3
6	> 400 ≤ 600	>16.0≤ 25.0	6	Alloy steel heat treated	6	Plate and slab	6	2 and 4
7	> 600 ≤ 1000	>25.0≤ 40.0	7	Nonferrous metal	7	Cast and forge Component	7	2 and 5
8	>1000≤ 2000	>40.0≤ 80.0	8	Light alloy	8	Welded assembly	8	3 and 4
9	> 2000	>80.0	9	Other materials	9	Premachined components	9	2+3+4+5

Table concluded

Example:
A part design is shown in figure. Develop an optiz code for that design

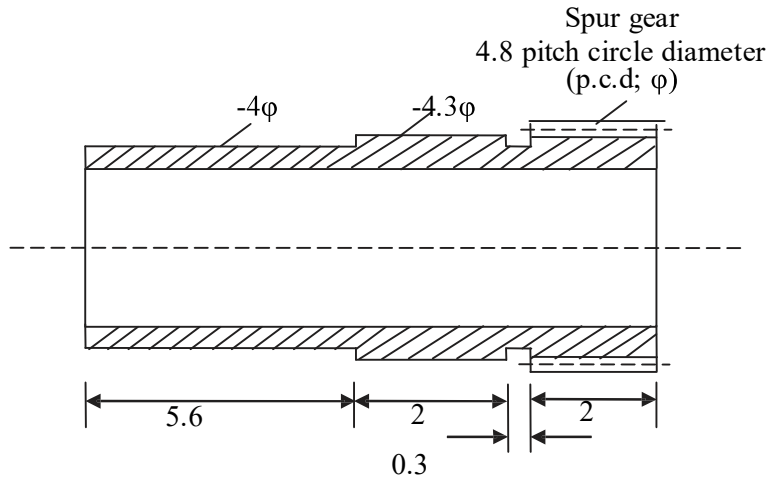

By using information from figure, the form code with explanation is given below
Part class:

Form code

Form code	1	3	1	0	6

Rotational part, L/D = 9.9/4.8 = 2.0 (nearly) based on the pitch circle diameter of the gear. Therefore, the first digit would be 1.

External shape:

The part is stepped in one side with a functional groove. Therefore, the second digit will be 3.

Internal shape:

Due to the hole the third digit code is one.

Plain surface machining:

Since, there is no surface machining the fourth digit is 0.

Auxiliary holes and gear teeth:

Because there are spur gear teeth on the part the fifth digit is 6.

The KK3 system

The KK3 system is one of the general-purpose classification and coding system for machined parts. It was developed by the Japanese society for the encouragement of the machined industry.

KK-3 was first presented in 1976 and use a 21-digit decimal system. Tables show the code structure for rational component. It can represent more information than that of optiz code because of greater length. It includes two digits for component name or

functional name classification. First digits classify the general function, such as gears, shafts, drive and moving parts, and fixing parts. The second digit describes more detailed function such as spur gears, bevel gears, worm gears, and so on.

KK-3 also classifies materials using two-code digit. The first digit classifies material type and second digit classifies shape of the raw material. Length, diameter, and length/diameter ratios are classified for rotational components. Shape details and types of processes are classified using 13 digits of code. At last one digit is required for accuracy presentation. An example of coding a component using KK-3 is illustrated in figure 7.6 and table 7.5.

Digit	Items (rotational component)		
1	Parts name	General classification	
2		Detail classification	
3	Materials	General classification	
4		Detail classification	
5	Chief dimension	Length	
6		Diameter	
7	Primary shapes and length diameter ratio		
8	Shape details and kinds of processes	External surface	External surface and outer primary shape
9			Concentric screw threaded parts
10			Functional cut-off parts
11			Extraordinary shaped parts
12			Forming
13			Cylindrical surface
14		Internal surface	Internal primary shape
15			Internal curved surface
16			Internal flat surface and cylindrical surface
17		End surface	
18		Nonconcentric holes	Regularly located holes
19			Special holes
20		Noncutting process	
21	Accuracy		

Table: Structure of the KK-3 coding system (rotational components)

I \ II			0	1	2	3	4	5	6	7	8	9	II / I
0	Rotational components	Gears	Spur, helical gear(s)	Internal gear(s)	Bevel gear (s)	Hypoid gear (s)	Worm gear (s)	Screw gear (s)	Sprocket wheel	Special gear	Round vessel	Other (s)	Gears
1		Shafts, spindles	Spindle, arbor, main drive	Counter shaft	Lead screw (s)	Screwed shaft	Round rod (s)	Eccentric shaft (s)	Splined Shaft	Cross shaft	Round column	Round casting	Shafts, spindles
2		Main drive	Pulley(s)	Clutch	Brake (s)	Impeller (s)	Piston (s)	Round tables	Other (s)	Flange	Chuck (s)	Labyrinth seal (s)	Main drive
3		Guiding parts	Sleeves, bushing	Bearing metal	Bearing (s)	Roller (s)	Cylinder	Other (s)	Dial plate (s)	Index plate (s)	Cam (s)	Others	Guiding parts
4		Fixing part	Collar(s)	Socket, spacer	Pin (s)	Fastening screws	Other (s)	Handles	Spool (s)	Round links	Screw (s)	Others	Fixing part
5	Nonrotational												
6													
. .													
9													

Table: Functional delineation of the KK-3 coding system

Example 7.2

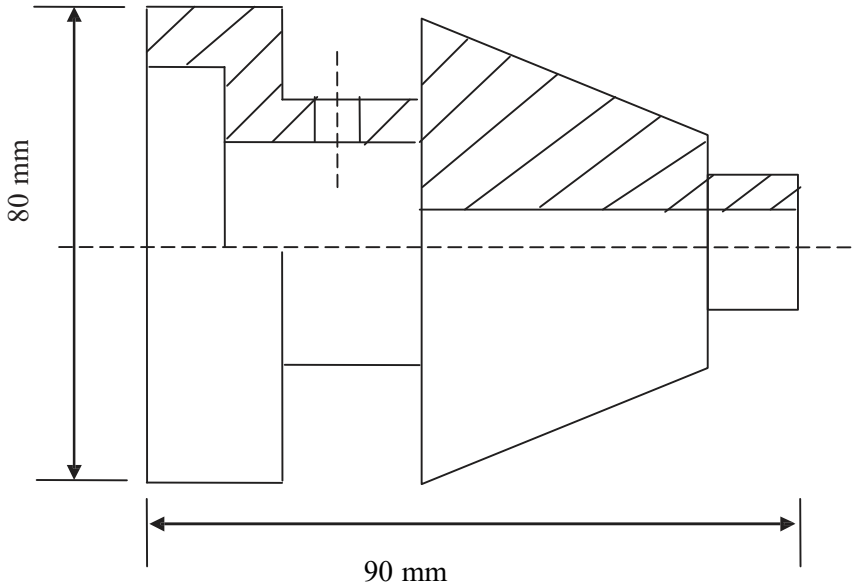

Figure: a machine part

Code digit	Item	Component condition	Code
1	Name	Control valve (others)	0
2			9
3	Material	Copper bar	7
4			
5	Dimension length	90mm	2
6	Dimension diameter	80 mm	2
7	Primary shape and ratio of chief dimension	L/D 1.125	2
8	External surface	With functional tapered surface	3
9	Concentric screw	None	0
10	Functional cutoff	None	0
11	Extra ordinary shape	None	0
12	Forming	None	0
13	Cylindrical surface≥ 3	None	0
14	Internal primary	Piercing hole with dia. Vibration, no cutoff	2
15	Internal curved surface	None	0
16	Internal flat surface		0
17	End surface	Flat	0
18	Regularly located holes	Holes located on circumferential line	3
19	Special holes	None	0
20	Noncutting process	None	0
21	Accuracy	Grinding process on external surface	4

Table: KK-3 Code for given example

The MICLASS system

Originally TNO of Holland developed MICLASS system, and is maintained in the United States by the organization for industrial research. It is a chain-structured code of 12 digits. It includes both design and manufacturing information. Information such as the main shape, shape elements, position of shape elements, main dimensions, ratio of dimensions, auxiliary dimension, tolerance, and the machinability of the material is included (Table 7.6). An additional 18 digits of code is also available for user-specified information (i.e. part function, lot size, major machining operation, etc). These supplementary digits provide flexibility expansion.

Code position	Item
1	Main shape
2	Shape elements
3	
4	Position of shape element
5	Main dimension
6	
7	Dimension ratio
8	Auxiliary dimension
9	Tolerance codes
10	
11	Material codes
12	

Table: MICLASS code structure

The DICLASS systems

Del Allen at Brigham Young University developed the DICLASS system. It is a tree-structured system that can generate codes for components, materials, processes, machines, and tools. For components, an eight-digit code is used.

Digits	Item
1-3	Basic shape
4	From feature
5	Size
6	Precision
7-8	Material

Table: Description of DICLASS code structure

In DICLASS, each branch represents a condition, and a code can be found at the terminal of each branch. This system is not only a coding system, but also a decision-support system.

Underutilization of expansive processing equipment is a common characteristic of big industries. The underutilization can have two forms.

1. Much of the machine time is idle and totally unproductive.
2. Many of the parts assigned to a specific machine are far below the capacity of the machine.

Machines can be more fully utilized from both by using effective scheduling as well as a capacity technique utilization by grouping closely matched parts into a part family. By using a part coding system, similar parts having similar feature dimension specification can be assigned to the part family, and machines corresponding to the minimum product specification can be selected rather than over specifying the processing. The phenomenon for lathe parts. In the figure it can be seen that only a few percent of the parts being machined required the full lathe swing or length. Further more, the speed and feed capacity of the lathe can also be over specified in

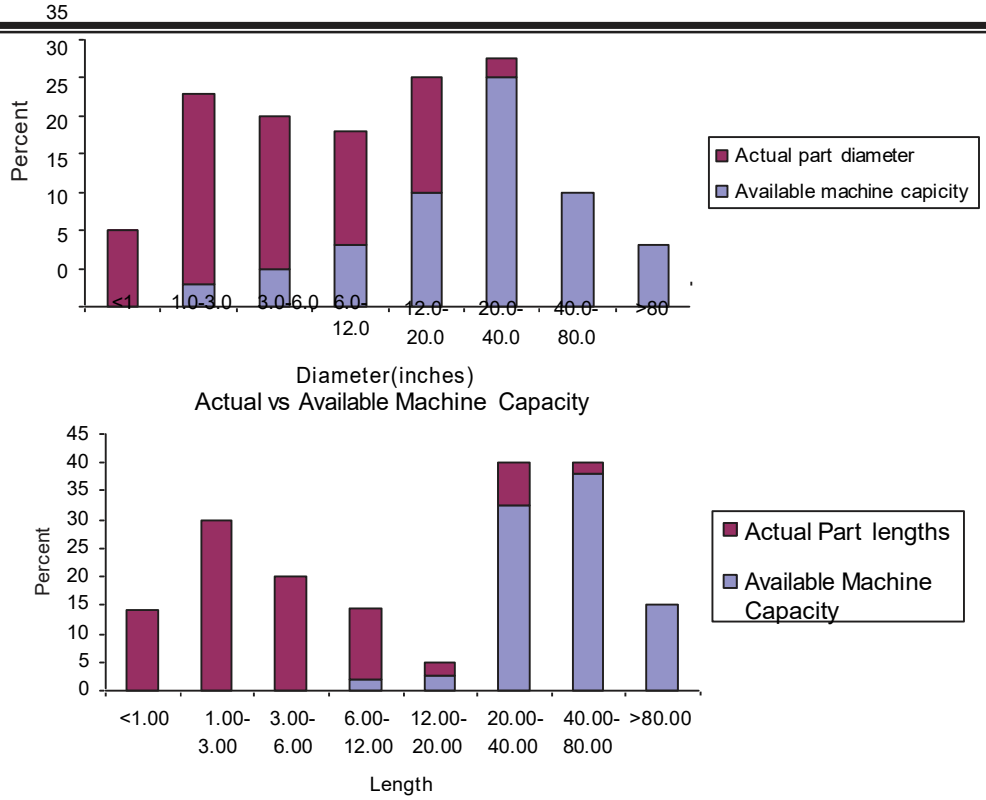

Figure 7.7 Comparision of a turned-part dimension as a function of machine capacity

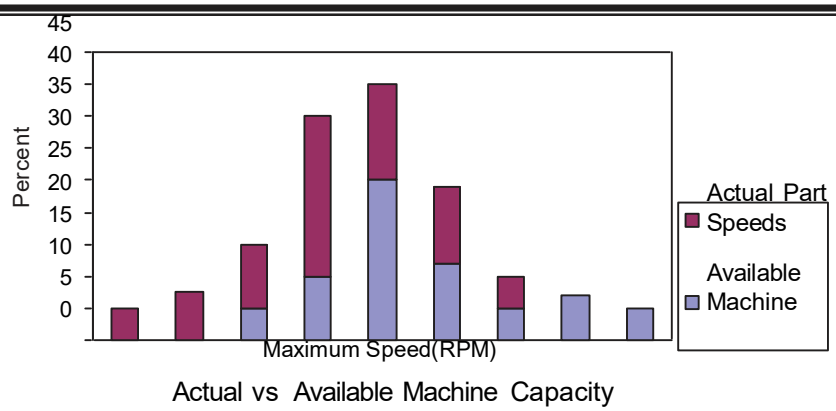

Actual vs Available Machine Capacity

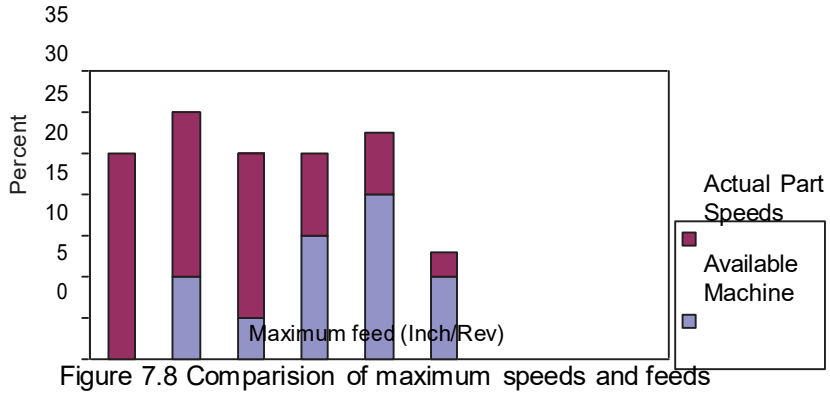

Figure 7.8 Comparision of maximum speeds and feeds with maximum used

MODELS FOR MACHINE CELL AND PART FAMILY FORMATION

One of the primary uses of coding system in manufacturing is to develop part families for efficient workflow. Efficient workflow can result from grouping machines logically so that material handling and setup can be minimized. The same tools and fixtures can be used by grouping parts having similar operations. Due to this, a major reduction in setup results and also material handling between machining operations is minimized.

Family formation is based on production parts or more specifically, their manufacturing feature. Components requiring similar processing are grouped into the same family. There is no rigid rule

require similar routing. A user may want to put only those parts having exactly the same routing sequence into a family. Minimum modification on the standard route is required for such family members. Only, few parts will qualify for family membership. On the other hand, if one groups all the parts requiring a common machine into family, large part families will results.

Before grouping can start, information related to the design and processing of all existing components have to be collected from existing part and processing files. Each component is represented in a coded form, called an operation-plan code (operation plan code, Table 7.8). An OP code represents a series of operations on a machine and/or one workstation.

Operation code		Operation plan
01	SAW 01	Cut to size
02	LATHE 02	Face end
		Drill
		Center drill
		Ream
		Bore
		Turn straight
		Turn groove
		Chamfer
		Cutoff
		Face
03	GRIND 05	Grind
04	INSP 06	Inspect dimension
		Inspect finish

1. operation-plan code (OP code) and operation plan
   1 SAW 01
   2 LATHE 02
   3 GRIND 05
   4 INSP 06
2. OP-code sequence

Table: Operation plan, OP code, and Op-code sequence

For example, we can use GRIND05 to represent the sequence; load the work piece onto the grinding machine, attach the grinding wheel, grind the work piece, and unload the work piece from the grinding machine. Operations represented by the Op code are called an operation plan. It is not necessary that an OP code include all operations required on a machine for a component. It is used to represent a logical group of operations on a machine, so that a process plan can be represented in a much more concise manner. Such a representation is called an OP code sequence. The main aim of an OP code is to simplify the representation of process plans. This simplified process plan can be stored and retrieved

PRODUCTION FLOW ANALYSIS

problem for manufacturing cell design. This analysis uses the information contained on production route sheets. Work parts with identical or similar routing are classified into part

families which can be used to form logical machine cells in a group technology layout. Since PFA uses manufacturing data rather than design data to identify part families, it can overcome two possible abnormalities that can occur in part classification and coding. First, parts whose basic geometries are quite different may nevertheless require similar or identical process routing. Second, parts whose geometries are quite similar may nevertheless require process routing that are quite different.

The procedure in PFA consists of the following steps.

Machine classification. Classification of machines is based on the operation that can be performed on them. A machine type is assigned to machines capable of performing similar operations.

Checking part list and production route information. For each parts, information on the operations to be taken and the machines required to perform each of these operations is checked carefully

Factory flow analysis. This comprise a micro level examination of flow of components through machines. Thus, it allows the problem to be decomposed into a number of machine-component groups.

Machine-component group analysis. This analysis recommended manipulating the matrix to form cells.

Many researchers have been subsequently developed algorithm to solve the family-formation problem for manufacturing cell design. In PFA, a large matrix generally termed as incidence is constructed. Each row represents an OP code, and each column represents a component. We can define the matrix as M_{ij}, where i indicates the optiz code and j indicates components for example M_{ij} = 1 if component j has OP code i; otherwise Mij = 0. The objective of PFA is to bring together those components that need the similar set of OP codes in clusters.

Rank order clustering

This method is based on sorting the rows and columns of machine part incidence matrix. The rank order clustering was developed by King (1980). Steps of this algorithm is given below

Step 1. For each row of the machine part incidence matrix, assign binary weight and calculate the decimal equivalent

Step 2. Sort rows of the binary matrix in decreasing order of the corresponding decimal weights.

Step 3. Repeat the preceding two steps for each column.

Step 4. Repeat the preceding steps until the position of each element in each row and column does not change.

A weight for each row i and column j are calculated as follows:

$$\text{Row } i : W_i = \sum_{k=1}^{n} a_{ik} \, 2^{n-k}$$

$$\text{Column } j : W_j = \sum_{k=1}^{m} a_{kj} \, 2^{n-k}$$

In the final matrix generated by the ROC algorithm, clusters are identified visually.

Example 7.3

Step 1. Assign binary equivalent to each row and calculate binary equivalent:

Part number

Part number	2^4	2^3	2^2	2^1	2^0	Decimal equivalent
	1	2	3	4	5	
		1		1	1	11
1			1			20
		1		1		10
1			1			20

Machine number

Step 2. Sorting the decimal weights in decreasing order results in the following matrix:

Part number

	1	2	3	4	5	
1	1		1			24
		1		1	1	1
		1		1		3

Machine number

Step 3. Repeating the proceeding steps for each column produces the following matrix:

Part number

	1	3	2	4	5	
	1	1				2
1	1					4
			1	1	1	1
			1	1		3

Machine number

In this matrix two separate clusters are visible

Bond energy algorithm

McCormick, Schweitzer, and white (1972) developed an interchange-clustering algorithm called the bond energy algorithm (BEA). The BEA seeks to form by minimizing the measure of effectiveness. This is defined as follows:

$$ME = \frac{1}{2} \sum_{i=1}^{m} \sum_{j=1}^{n} a_{ij} \left(a_{i,j-1} + a_{i,j+1} + a_{i+1,j} + a_{i-1,j} \right) \quad \ldots (3)$$

BEA algorithm

Step 1. Set j=1. Select one of the columns arbitrarily.

Step 2. Place each of the remaining n-j columns, one at a time, for each of j+1 positions, and compute each column‘s contribution to the ME.

Place the column that gives the largest incremental contribution to the ME in its best location.

Increase j by 1 and repeat the preceding steps until j=n.

Step 3. When all the columns have been placed, repeat the procedure for the rows.

The BEA applied to the Example7.3 and is illustrated below in Example 7.4

Example 7.4

Step 1. Set j=1. Select column 2.

Step 2. Place each of the remaining columns in each of the j+1 position. The contribution to the ME value of the column 2 is computed next:

Position	J=1	J+1	ME value
Column number	2	1	0
	2	3	0
	2	4	2
	2	5	1

Column 4 is placed in the j+1 position.

Machine number

SCHEDULING AND CONTROL IN CELLULAR MANUFACTURING

This section discusses some issues related to scheduling and control in cellular manufacturing. In cellular manufacturing systems, scheduling problems different form those in traditional production systems due to certain uniqueness like

1. Machines are more flexible in performing various operations.
2. Use of group tooling significantly reduces setup time.
3. Low demands and large variety of products
4. Fewer machines than part types.

These characteristics alter the nature of scheduling problems in GT-cellular manufacturing systems and allow us to take benefit of similarities of setups and operations by integrating GT concept with material requirement planning (MRP). A hierarchical approach to cell planning and control, integrating the concepts of GT and MRP, is given here. We discuss using suitable examples how the concepts of GT and MRP can be used together to provide an efficient tool for scheduling and control of a cellular manufacturing system.

We know that GT is one of the useful approaches to small-lot, multiproduct production system, and MRP is an effective scheduling and control system for a batch type of production system. Optimal lot sizes are determined for various parts required for products in an MRP system. However, similarities among the parts requiring similar setups and operations will reduce setup time. On the other hand, the time-phased requirement scheduling aspect is not considered in GT. It means, all the parts in a group are assumed to be available at the beginning of the period. Evidently, a better scheduling and control system will be achieved by integration of GT and MRP. For scheduling and control in cellular manufacturing systems an integrated GT and MRP framework are defined in the next subsection.

An Integrated GT and MRP structure

The goal of an integrated GT and MRP framework is to take advantage of the similarities of setups and operations from GT and time-phased requirements from MRP. This can be achieved through a series of simple steps as follows:

Step I. Collects the data that are normally required for both the GT and MRP concepts (that is, machine capabilities, parts and their description, a break down of each final product into its individual components, a forecast of final product demand, and so forth).

Step II. Use GT procedures for determining the part families. Designate each families as GI (I=1, 2, 3,…, N)

Step III. Use MRP for assigning each part to a specific time period.

Step IV. Arrange the component part-time period assignments of step III according to part family groups of step II.

Step V. Use a suitable group scheduling algorithm to determine the optimal schedule for all the parts within a given group for each time period.

We now illustrate the integrated framework with a simple example.

Example 7.5

Prakash and Prakash (PP) produces all the parts in a flexible manufacturing cell required to assemble five products designated as P1,……., P5. These products are assembled using parts J1, J2……., J9. Product structure is given in table (7.10). Using GT, we are able to divide these nine parts into three part families, designated as G1, G2, and G3. The number of units required for each product for the month of March has been determined to be P1 = 50, P2 = 100, P3 =150, P4 = 100, and P5 = 100.

Using GT and MRP concepts, determine weekly requirements for all these groups.

Product name	Part name	Number of units required
P1	J1 J2 J3	1 1 2
P2	J2 J4 J6	1 1 1
P3	J1 J2 J5	1 1 1
P4	J6 J7 J8	1 1 1
P5	J7 J8 J9	1 1 1

Table 7.10 Product structure

Solution:

Product demand is exploded to parts level and the information is summarized in table7.11.

Using MRP, the precise number of each part on a weekly basis can be determined. Suppose the weekly requirement for products P1,……., P5 are obtained as shown in table (7.12). The table gives the number of units of each products needed in each week of the month under consideration. However, we do not know the schedule within each week.

Group	Part name	Monthly requirement

G1	A1 A3 A5	200 100 150
G2	A2 A4	300 100
G3	A6 A7 A8 A9	200 200 200 100

Table 7.11 Monthly requirements of parts in each group

Thus, to take full advantage of the integrated GT-MRP system, table 7.10, 7.11, and 7.12 are combined into the integrated form as given in table 7.13. This table provides weekly requirements for all the parts for all the groups.

Part name	Week I	Week II	Week III	Week IV
P1	25	00	25	00
P2	25	25	25	25
P3	25	50	25	50
P4	50	00	00	50
P5	00	50	50	00

Table 7.12 weekly requirements for the products

Group	Part name	Weekly requirement for the parts			
		Week I demand	Week II demand	Week III demand	Week IV demand
G1	A1	50	50	50	50
	A3	50	00	50	00
	A5	25	50	25	50
G2	A2	75	75	75	75
	A4	25	25	25	25
G3	A6	100	100	100	00
	A7	11	00	100	00
	A8	50	50	50	50
	A9	25	25	25	25

Table 7.13 Combined GT/MRP Data

Next, we may obtain an optimal schedule for each week of the entire month, by applying an appropriate scheduling algorithm to these sets of parts within a common group and week. Thus, it takes advantage of group technology-included cellular manufacturing as well as the MRP-derived due-date consideration.

Operation allocation in a cell with negligible setup time

Flexibility is one of the important features of cellular manufacturing. That is, an operation on a part can be performed on alternative machines. Consequently, it may take more processing time

on a machine at less operating cost, compared with less processing time at higher operating cost on another machine. Therefore, for a minimum-cost production the allocations of operations will be different than for a production plans for minimum processing time or balancing of workloads. Production of parts has two important criteria from the manufacturing point of view, 1st minimum processing time and 2nd quick delivery of parts. Balancing of workloads on the machines is another consideration from the cell operation point of view. In this section a simple mathematical programming models for operations allocations in a cell meeting these objective is given when the setup times are negligible.

P= part types (p=1, 2, 3……..P)

d_k=demand of each part types

M= machine types (m= 1, 2, 3……M)

c_m= capacity of each machine

o_k= operations are performed on part type p

The unit processing time and unit processing cost required to perform an operation on a part are defined as follows:

$$UP_{pom} = \begin{cases} \text{Unit processing cost to perform } o^{th} \text{ operation on } p^{th} \text{ part in } m^{th} \text{ machine} \\ \infty \text{ Otherwise} \end{cases}$$

$$UT_{pom} = \begin{cases} \text{Unit processing time to perform } o^{th} \text{ operation on } p^{th} \text{ part in } m^{th} \text{ machine} \\ \infty \text{ Otherwise} \end{cases}$$

Due to the flexibility of machine, an operation can be performed on alternative machines. Therefore, a part has different processing routes for manufacturing.

$$a_{plom} = \begin{cases} \text{If in a plan } l \text{ the } o^{th} \text{ operation on the } p^{th} \text{ part is performed on } m^{th} \text{ machine} \\ 0 \text{ Otherwise} \end{cases}$$

let Y_{pl} be the decision variable representing the number of units of part p to be processed using plan *l*. The objective of minimizing the total processing cost to manufacture all the parts is given by

$$\text{Minimize} \quad Z_1 = \underset{plom}{a_{plom}} UP_{plom} Y_{pl}$$

Subjected to following

$$\sum_{l} Y_{pl} \quad d_k \qquad p \ldots (4)$$

$$a_{plom} UT_{plom} Y_{pl} \quad c_m \qquad m \ldots (5)$$

$$Y_{pl} \quad 0 \qquad p, l \ldots (6)$$

Constraint 3 indicates that the demand for all parts must be met; constraint 2 indicates that the capacity of machines should not be violated, and constraints 3 represent the non-negativity of the decisions variables.

Similarly, the objective of minimizing the total processing time to manufacture all the parts is given by

Minimize $Z_2 = \sum_{plom} a_{plom} UT_{plom} Y_{pl}$

Subjected to following constraints:

Same as constraints 4, 5, 6.

The objective of balancing the workloads is given by

$$Z_3 - \sum_{plom} a_{plom} UT_{plom} Y_{pl} \quad 0$$

Subjected to following constraints:

Same as constraints 4, 5, 6.

Solution to this type of mathematical model can be easily found out by using existing software packages like LINDO etc.

Example 7.5

Consider the manufacturing of five part types on four types of machines. Each part has a number of operations. The information on demand for each part, capacity available on machines, unit processing cost, and time for each operation on alternative machines are given in table 7.14. Develop a production plan using the following models.

1. Minimum processing cost model
2. Minimum processing time model
3. Balancing of workloads model

Parts/Operations	Machines types				Demand of Parts
	M1	M2	M3	M4	
1 Op1	(10,20)*		6.5,30		100
Op2		9.5,40	4.5,70		
2 Op1			6,80	10,60	80
Op2	7.5,60		6.5,70		
Op3				8.5,20	

3 Op1 Op2	9,40	13.5,10	8.5,25 5,25		70
4 Op1 Op2 Op3	7,35	8.5,40 11,10	5.5,60 4,80	9.5,20	50
5 Op1 Op2	10.5,25	9.5,40	7,60		40
Capacity of machines	2400	1960	960	1920	

Table 7.14 Data for Production Planning

Solution:

1. Minimum processing cost objective

Min f=

$60X_{11}+90X_{12}+100X_{13}+70X_{14}+140X_{21}+170X_{22}+160X_{23}+150X_{24}+50X_{31}+35X_{32}+50X_{33}+$
$65X_{34}+85X_{41}+125X_{42}+110X_{43}+150X_{44}+70X_{45}+110X_{46}+65X_{51}+85X_{52}$… (7)

Subjected to following constraints:

1. Demand satisfaction constraints

$X_{11}+X_{12}+X_{13}+X_{14}100$… (8)

$X_{21}+X_{22}+X_{23}+X_{24}80$… (9)

$X_{31}+X_{32}+X_{33}+X_{34}70$… (10)

$X_{41}+X_{42}+X_{43}+X_{44}+X_{45}+X_{46}50$…

(11) $X_{51}+X_{52}+X_{53}+X_{54}40$… (12)

2. Machine capacity constraints

$10X_{11}+10X_{12}+7.5X_{21}+7.5X_{23}+9X_{33}+9X_{34}+7X_{41}+7X_{42}+10.5X_{51}+10.5X_{52}2400$…

(13) $9.5X_{11}+9.5X_{14}+13.5X_{32}+13.5X_{33}+19.5X_{41}+11X_{42}+19.5X_{43}+11X_{44}+$
$19.5X_{45}+11X_{46}+ 9.5X_{51}1960$… (14)

$4.5X_{12}+11X_{13}+6.5X_{14}+12.5X_{22}+6X_{23}+6.5X_{24}+13.5X_{31}+5X_{32}+ 8.5X_{34}+5.5X_{42}+$
$5.5X_{43}+9.5X_{44}+4X_{46}+7X_{52}960$… (15)

$18.5X_{21}+8.5X_{22}+8.5X_{23}+18.5X_{24}+ 9.5X_{45}+9.5X_{46}1920$… (16)

2. Minimum processing time objective

Min f=$19.5X_{11}+14.5X_{12}+11X_{13}+16X_{14}+26X_{21}+21X_{22}+22X_{23}+25X_{24}+ 13.5X_{31}+18.5X_{32}+$
$22.5X_{33}+ 17.5X_{34}+26.5X_{41}+22X_{42}+25X_{43}+20.5X_{44}+29X_{45}+24.5X_{46}+20 X_{51}+17.5X_{52}$… (17)

Subjected to:

The same constraints as given for the minimum cost model.

3. Balancing of workloads objective function

Min f=Z_3… (18)

Subjected to:

All the constraints given for the first model as well as following extra constraints

Z_3- $(10X_{11}+10X_{12}+7.5X_{21}+7.5X_{23}+9X_{33}+9X_{34}+7X_{41}+7X_{42}+10.5X_{51}+10.5X_{52})$ 0… (19)

Z_3-$(9.5X_{11}+9.5X_{14}+13.5X_{32}+13.5X_{33}+19.5X_{41}+11X_{42}+19.5X_{43}+11X_{44}+ 19.5X_{45}+11X_{46}+ 9.5X_{51})$ 0… (20)

Z_3-$(4.5X_{12}+11X_{13}+6.5X_{14}+12.5X_{22}+6X_{23}+6.5X_{24}+13.5X_{31}+5X_{32}+ 8.5X_{34}+5.5X_{42}+ 5.5X_{43}+9.5X_{44}+4X_{46}+7X_{52})$ 0… (21)

Z_3-$(18.5X_{21}+8.5X_{22}+8.5X_{23}+18.5X_{24}+ 9.5X_{45}+9.5X_{46})$ 0… (22)

On solving these three models using LINDO (a linear programming package), the results shown in table 7.15 are obtained.

Parts	Process routes	Minimum cost production plan	Minimum processing time production plan	Production plan with balancing of workloads
Part 1	M1-M2 M1-M3	83 17	 100	6 94
Part 2	M4-M1-M4	80	80	80
Part 3	M3-M3 M2-M3 M2-M1 M3-M1	31* 39	 60 10 	 10
Part 4	M1-M2-M2 M1-M3-M2 M4-M2-M2 M4-M3-M2	4* 46* 	10 32 8	 4 46
Part 5	M2-M1 M3-M1	21 19	40	40

Table 7.15 results of operation allocation and production planning for Example 7.5

Introduction to Computer Integrated Manufacturing (CIM)

1. Flexible Manufacturing System (FMS)
2. Variable Mission Mfg. (VMM)
3. Computerized Mfg. System (CMS)

Four-Plan Concept of Manufacturing

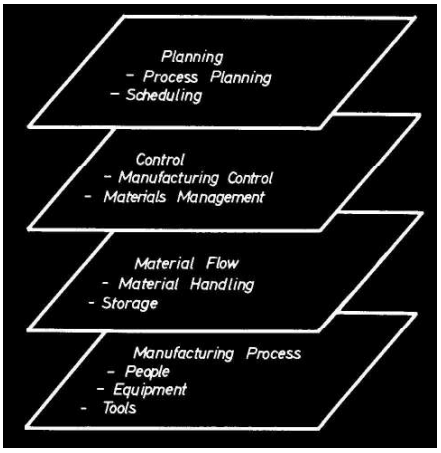

CIM System discussed:

- Computer Numerical Control (CNC)
- Direct Numerical Control (DNC)
- Computer Process Control
- Computer Integrated Production Management
- Automated Inspection Methods
- Industrial Robots etc.

A CIM System consists of the following basic components:

I. Machine tools and related equipment
II. Material Handling System (MHS)
III. Computer Control System
IV. Human factor/labor

CIMS Benefits:

1. Increased machine utilization
2. Reduced direct and indirect labor
3. Reduce mfg. lead time
4. Lower in process inventory
5. Scheduling flexibility
6. etc.

CIM refers to a production system that consists of:

1. A group of NC machines connected together by
2. An automated materials handling system
3. And operating under computer control

Why CIMS?

In Production Systems

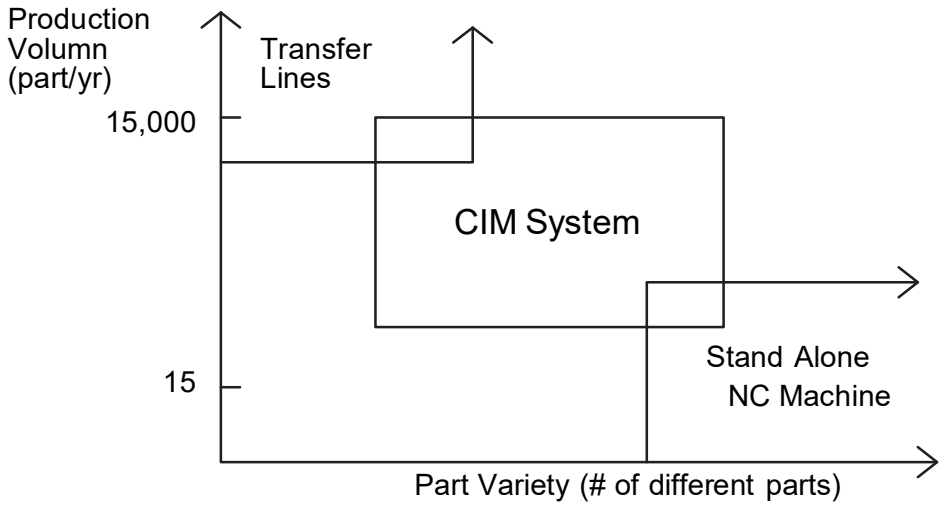

1. Transfer Lines: is very efficient when producing "identical" parts in large volumes at high product rates.
2. Stand Alone: NC machine: are ideally suited for variations in work part configuration.

In Manufacturing Systems:

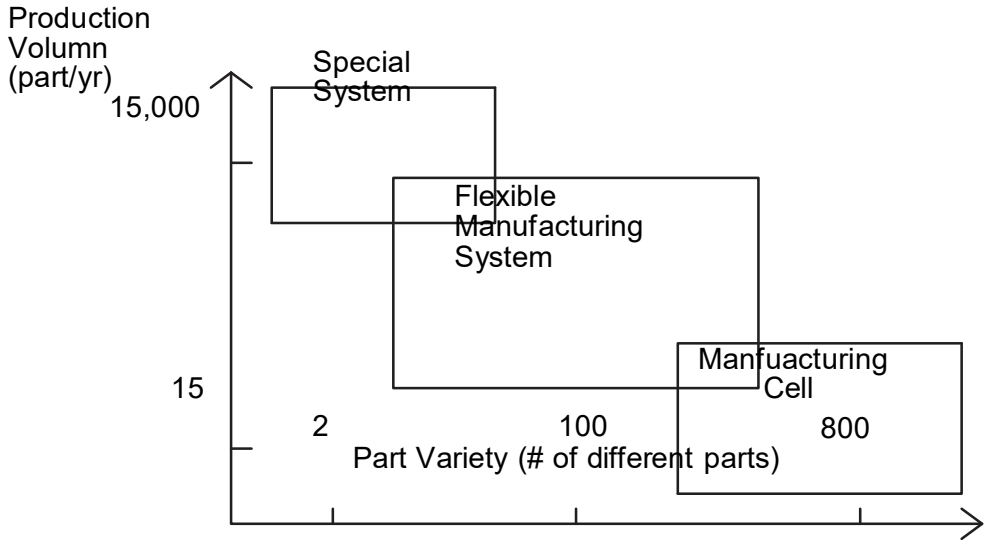

1. Special Mfg. System: the least flexible CIM system. It is designed to produce a

very limited number of different parts (2 - 8).

2. Mfg. Cell: the most flexible but generally has the lowest number of different parts manufactured in the cell would be between 40 - 80. Annual production rates rough from 200 - 500.
3. Flexible Mfg. System: A typical FMS will be used to process several part families with 4 to 100 different part numbers being the usual case.

General FMS

Conventional Approaches to Manufacturing

Conventional approaches to manufacturing have generally centered around machines laid out in logical arrangements in a manufacturing facility. These machine layouts are classified by:

1. Function - Machines organized by function will typically perform the same function, and the location of these departments relative to each other is normally

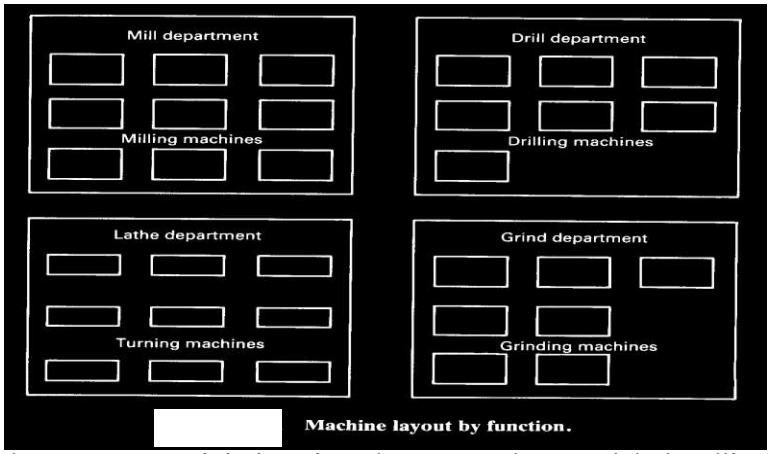

Machine layout by function.

arranged so as to minimize interdepartmental material handling. Workpiece produced in functional layout departments and factories are generally manufactured in small batches up to fifty pieces (a great variety of parts).

2. Line or flow layout - the arrangement of machines in the part processing order or sequence required. A transfer line is an example of a line layout. Parts progressively move from one machine to another in a line or flow layout by means of a roller conveyor or through manual material handling. Typically, one or very few different parts are produced on a line or flow type of layout, as all parts processed require the same processing sequence of operations. All machining is performed in one department, thereby minimizing interdepartmental material handling.

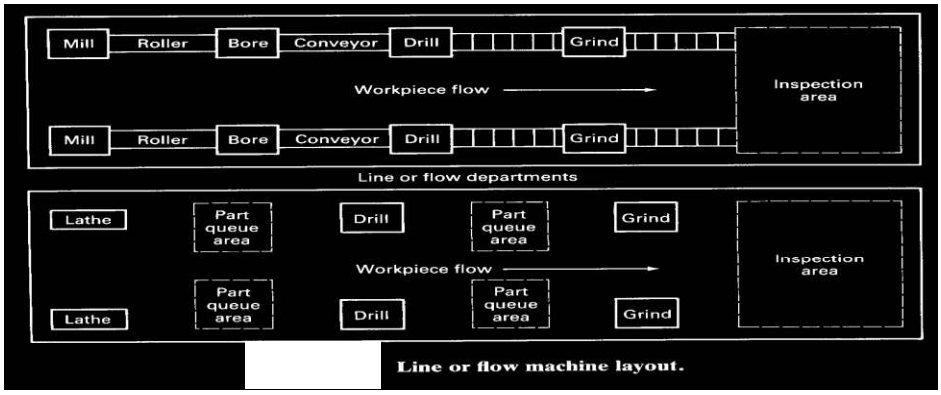

Line or flow machine layout.

3. Cell - It combines the efficiencies of both layouts into a single multi-functional unit.
   It referred to as a group technology cell, each individual cell or department is comprised of different machines that may not be identical or even similar. Each cell is essentially a factory within a factory, and parts are grouped or arranged into families requiring the same type of processes, regardless of processing order. Cellular layouts are highly advantageous over both function and line machine layouts because they can eliminate complex material flow patterns and consolidate material movement from machine to machine within the cell.

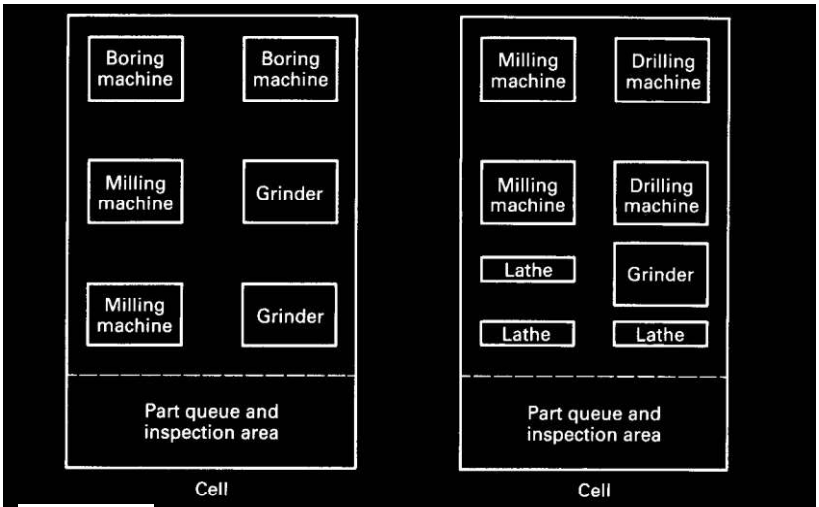

Machine layout by cell based on part families to be processed

Manufacturing Cell

Four general categories:

1. **Traditional stand-alone NC machine tool** - is characterized as a limited-storage, automatic tool changer and is traditionally operated on a one-to-one machine to operator ratio. In many cased, stand-alone NC machine tools have been grouped together in a conventional part family manufacturing cell arrangement and operating on a one-to-one or two-to-one or three-to-one machine to operator ratio.

2. **Single NC machine cell or mini-cell** - is characterized by an automatic work changer with permanently assigned work pallets or a conveyor-robot arm system mounted to the front of the machine, plus the availability of bulk tool storage. There are many machines with a variety of options, such as automatic probing, broken tool detection, and high-pressure coolant control. The single NC machine cell is rapidly gaining in popularity, functionality, and affordability.

3. **Integrated multi-machine cell** - is made up of a multiplicity of metal-cutting machine tools, typically all of the same type, which have a queue of parts, either at the entry of the cell or in front of each machine. Multi-machine cells are either serviced by a material-handling robot or parts are palletized in a two- or three-machine, in-line system for progressive movement from one machining

station to another.

FMS - sometimes referred to as a flexible manufacturing cell (FMC), is characterized by multiple machines, automated random movement of palletize parts to and from processing stations, and central computer control with sophisticated command-driven software. The distinguishing characteristics of this cell are the automated flow of raw material to the cell, complete machining of the part, part washing, drying, and inspection with the cell, and removal of the finished part.

I. Machine Tools & Related Equipment

- Standard CNC machine tools
- Special purpose machine tools
- Tooling for these machines
- Inspection stations or special inspection probes used with the machine tool

The Selection of Machine Tools

1. Part size
2. Part shape
3. Part variety
4. Product life cycle
5. Definition of function parts
6. Operations other than machining - assembly, inspection etc.

II. Material Handling System

A. **The primary work handling system** - used to move parts between machine tools in the CIMS. It should meet the following requirements.

i). Compatibility with computer control
ii). Provide random, independent movement of palletized work parts between machine tools.
iii). Permit temporary storage or banking of work parts.
iv). Allow access to the machine tools for maintenance tool changing & so on.
v). Interface with the secondary work handling system
vi). etc.

B. **The secondary work handling system** - used to present parts to the individual machine tools in the CIMS.

i). Same as A (i).
ii). Same as A(iii)
iii). Interface with the primary work handling system
iv). Provide for parts orientation & location at each workstation for processing.

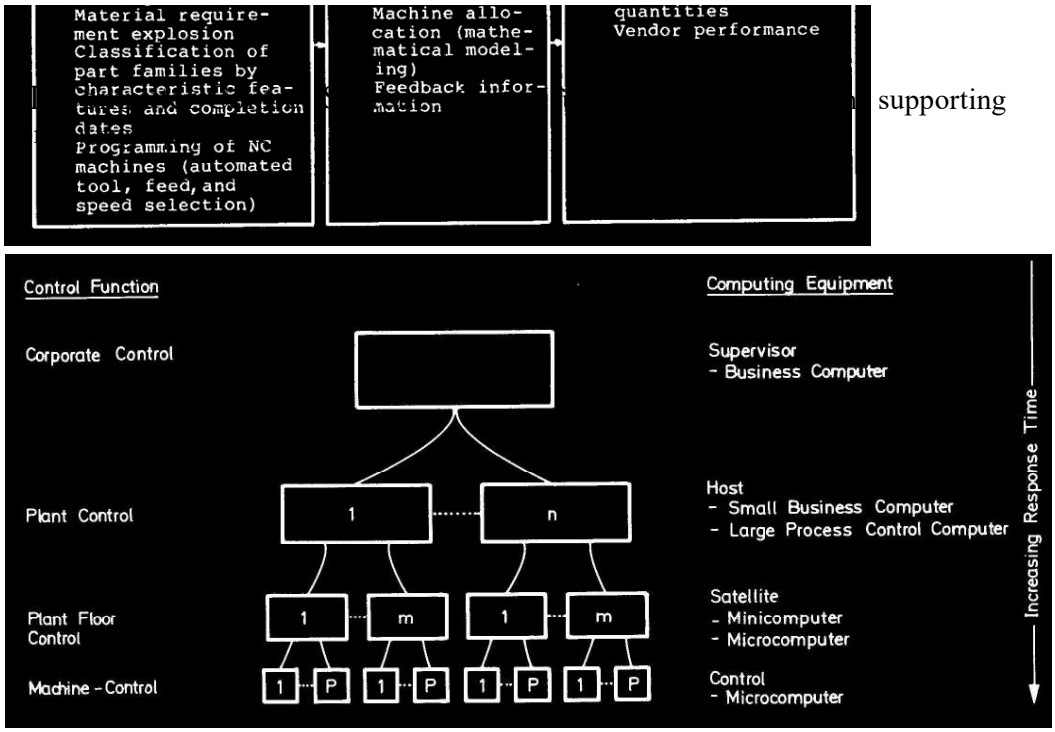

Control Loop of a Manufacturing System

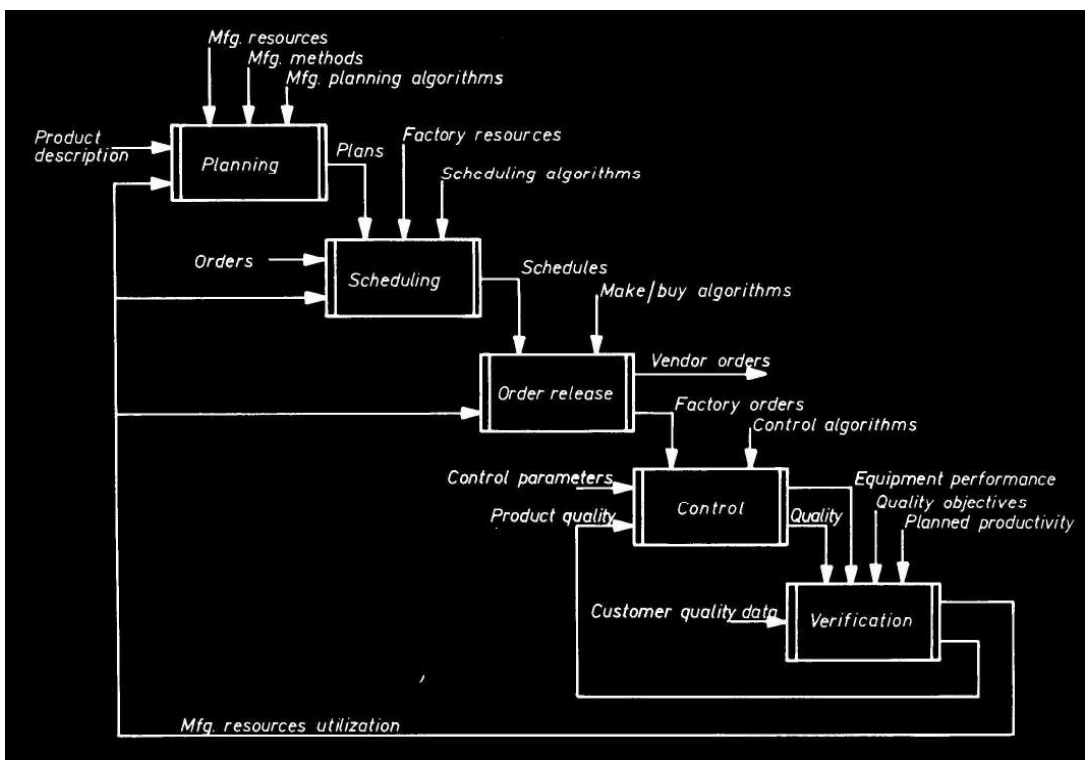

2. Direct Numerical Control (DNC) - A manufacturing system in which a number of m/c are controlled by a computer through direct connection & in real time.

Consists of 4 basic elements:

- Central computer
- Bulk memory (NC program storage)
- Telecommunication line
- Machine tools (up to 100)

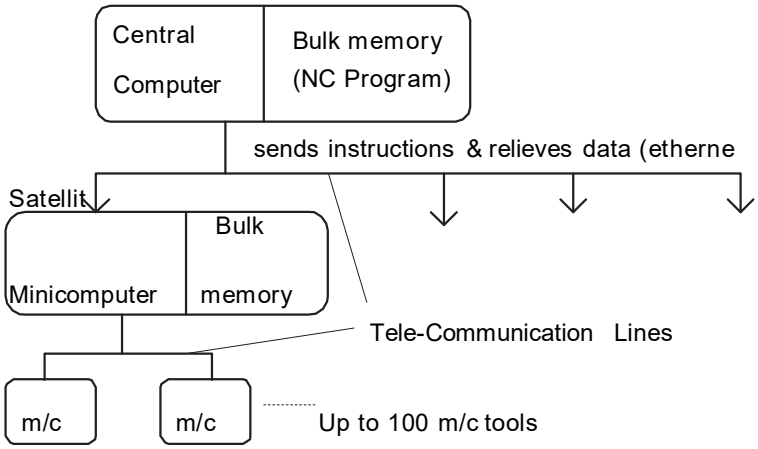

3. Production Control - This function includes decision on various parts onto the system.

Decision are based on:

- red production rate/day for the various parts
- Number of raw work parts available
- Number of available pallets

4. Traffic & Shuttle Control - Refers to the regulations of the primary & secondary transportation systems which moves parts between workstation.

5. Work Handling System Monitoring - The computer must monitor the status of each cart & /or pallet in the primary & secondary handling system.

6. Tool Control

- Keeping track of the tool at each station
- Monitoring of tool life

7. System Performance Monitoring & Reporting - The system computer can be programmed to generate various reports by the management on system performance.

- Utilization reports - summarize the utilization of individual workstation as well as overall average utilization of the system.
- Production reports - summarize weekly/daily quantities of parts produced from a CIMS (comparing scheduled production vs. actual production)
- Status reports - instantaneous report "snapshot" of the present conditions of the CIMS.
- Tool reports - may include a listing of missing tool, tool-life status etc.

8. Manufacturing data base

- Collection of independent data bases
- Centralized data base
- Interfaced data base
- Distributed data base

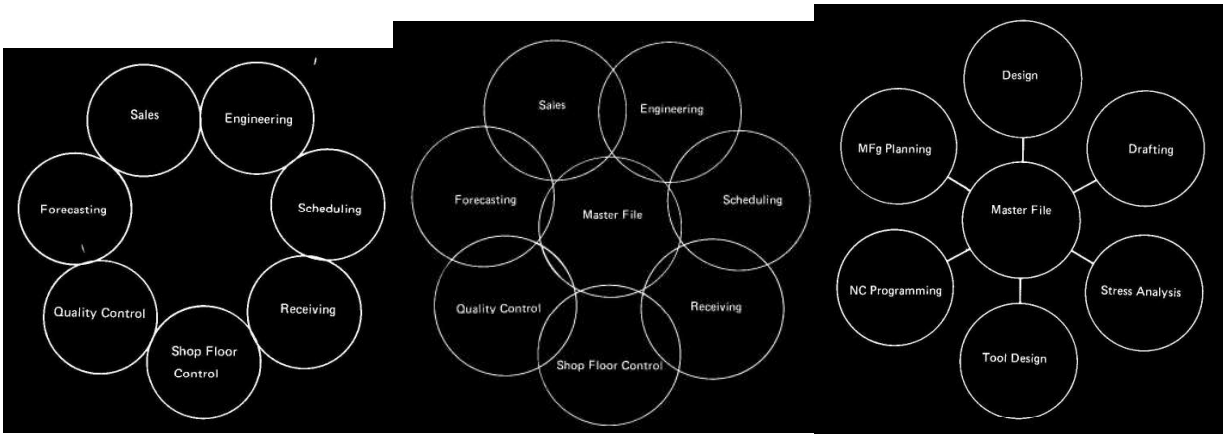

Production Strategy

The production strategy used by manufacturers is based on several factors; the two most critical are customer lead time and manufacturing lead time.

Customer lead time identifies the maximum length of time that a typical customer is willing to wait for the delivery of a product after an order is placed.

Manufacturing lead time identifies the maximum length of time between the receipt of an order and the delivery of a finished product.

Manufacturing lead time and customer lead time must be matched. For example, when a new car with specific options is ordered from a dealer, the customer is willing to wait only a few weeks for delivery of the vehicle. As a result, automotive manufacturers must adopt a production strategy that permits the manufacturing lead-time to match the customer's needs.

The production strategies used to match the customer and manufacturer lead times are grouped into four categories:

1. Engineer to order (ETO)
2. Make to order (MTO)
3. Assemble to order (ATO)
4. Make to stock (MTS)

Engineer to Order

A manufacturer producing in this category has a product that is either in the first stage of the life-cycle curve or a complex product with a unique design produced in single-digit quantities. Examples of ETO include construction industry products (bridges, chemical plants, automotive production lines) and large products with special options that are stationary during production (commercial passenger aircraft, ships, high-voltage switchgear, steam turbines). Due to the nature of the product, the customer is willing to accept a long manufacturing lead time because the engineering design is part of the process.

Make to Order

The MTO technique assumes that all the engineering and design are complete and the production process is proven. Manufacturers use this strategy when the demand is

unpredictable and when the customer lead-time permits the production process to start on receipt of an order. New residential homes are examples of this production strategy. Some outline computer companies make personal computer to customer specifications, so they followed MTO specifications.

Assemble to Order

The primary reason that manufacturers adopt the ATO strategy is that customer lead time is less than manufacturing lead time. An example from the automotive industry was used in the preceding section to describe this situation for line manufacturing systems. This strategy is used when the option mix for the products can be forecast statistically: for example, the percentage of four-door versus two-door automobiles assembled per week. In addition, the subassemblies and parts for the final product are carried in a finished components inventory, so the final assembly schedule is determined by the customer order. John Deere and General Motors are examples of companies using this production strategy.

Make to Stock

MTS, is used for two reasons: (1) the customer lead time is less than the manufacturing lead time, (2) the product has a set configuration and few options so that the demand can be forecast accurately. If positive inventory levels (the store shelf is never empty) for a product is an order-winning criterion, this strategy is used. When this order-winning criterion is severe, the products are often stocked in distribution warehouses located in major population centers. This option is often the last phase of a product's life cycle and usually occurs at maximum production volume.

Manufacturing Enterprise (Organization)

- In most manufacturing organizations the functional blocks can be found as:
- A CIM implementation affects every part of an enterprise; as a result, every block in the organizational model is affected.

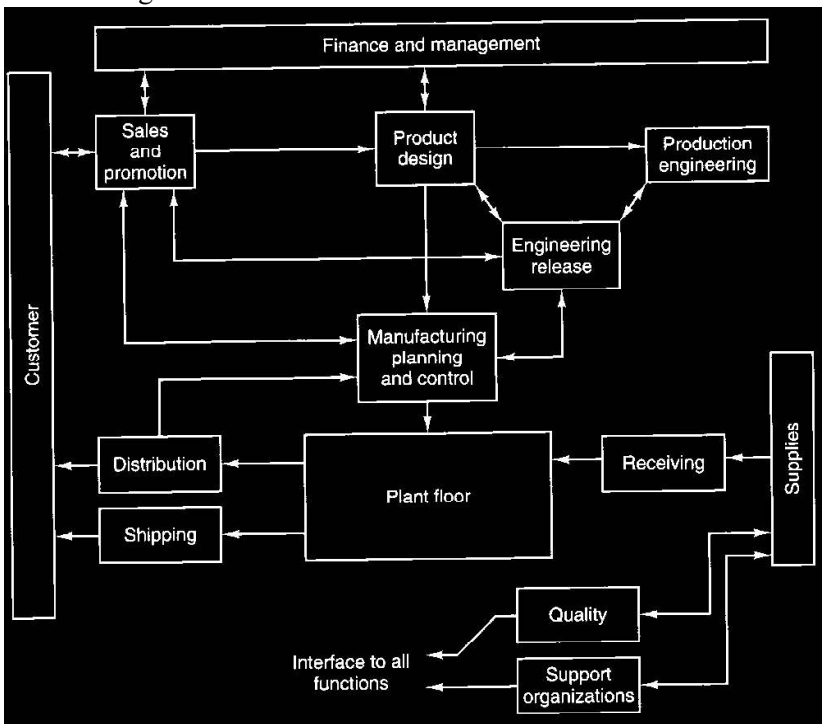

Sales and Promotion

- The fundamental mission of sales and promotion (SP) is to create customers. To achieve this goal, nine internal functions are found in many companies: sales, customer service, advertising, product research and development, pricing, packaging, public relations, product distribution, and forecasting.

sales and promotion interfaces with several other areas in the business:

- The customer services interface supports three major *customer* functions: order entry, order changes, and order shipping and billing. The order change interface usually involves changes in product specifications, change in product quantity (ordered or available for shipment), and shipment dates and requirements.
- Sales and marketing provide strategic and production planning information to the *finance and management* group, product specification and customer feedback information to *product design*, and information for master production scheduling to the *manufacturing planning and control group*.

Product/Process Definition Engineering

- The unit includes *product design*, *production engineering*, and *engineering release*.
- The product design provides three primary functions: (1) product design and conceptualization, (2) material selection, and (3) design documentation.
- The production engineering area establishes three sets of standards: work, process, and quality.
- The engineering release area manages engineering change on every production part in the enterprise. Engineering release has the responsibility of securing approvals from departments across the enterprise for changes made in the product or production process.

Manufacturing Planning and Control (MPC)

- The manufacturing planning and control unit has a formal data and information interface with several other units and departments in the enterprise.
- The MPC unit has responsibility for:
    1. Setting the direction for the enterprise by translating the management plan into manufacturing terms. The translation is smooth if order-winning criteria were used to develop the management plan.
    2. Providing detailed planning for material flow and capacity to support the overall plan.
    3. Executing these plans through detailed shop scheduling and purchasing action.

MPC Model for Information Flow

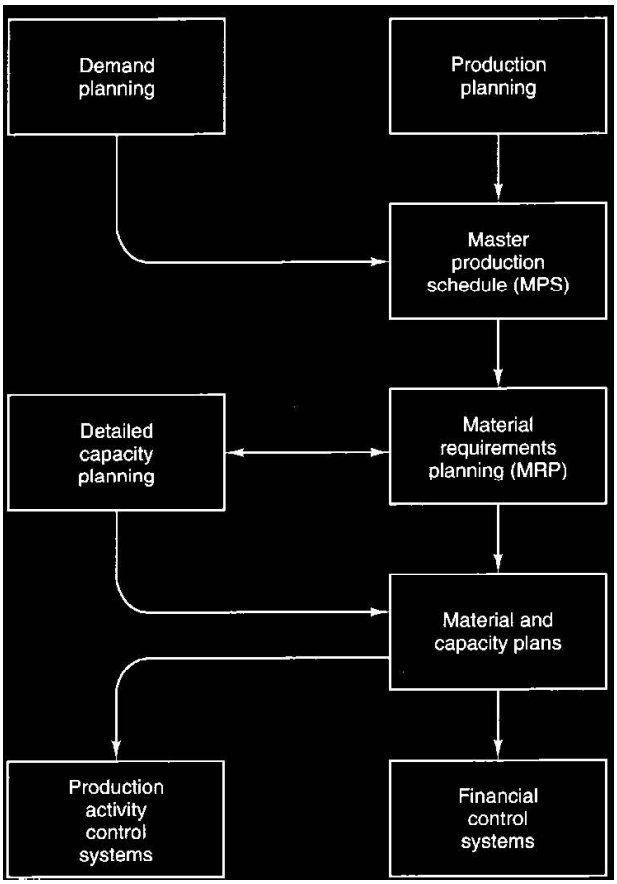

Shop Floor

- Shop floor activity often includes job planning and reporting, material movement, manufacturing process, plant floor control, and quality control.
- Interfaces with the shop floor unit are illustrated.

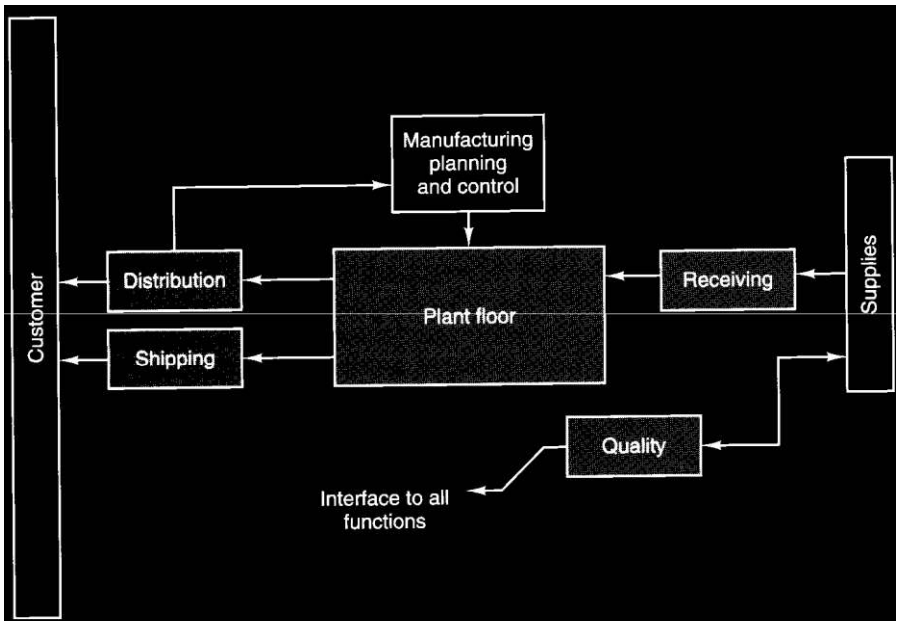

Support Organization

- The support organizations, indicated vary significantly from firm to firm.
- The functions most often included are security, personnel, maintenance, human resource development, and computer services.
- Basically, the support organization is responsible for all of the functions not provided by the other model elements.

Production Sequence :one possibility for the flow required to bring a product to a customer

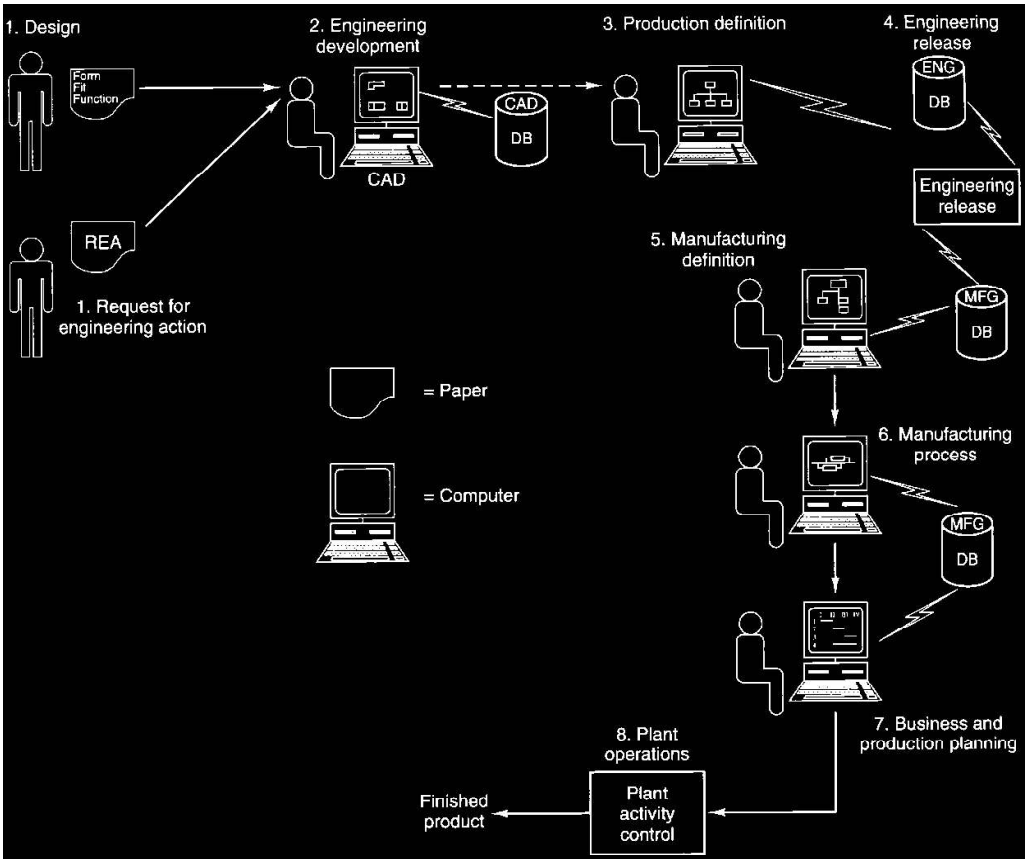

COMPUTER INTEGRATED MANUFACTURING

INTRODUCTION

Introduction

Computer integrated manufacturing(CIM) is a broad term covering all technologies and soft automation used to manage the resources for cost effective production of tangible goods.

Integration – capital, human, technology and equipment

CIM – which orchestrates the factors of production and its management.

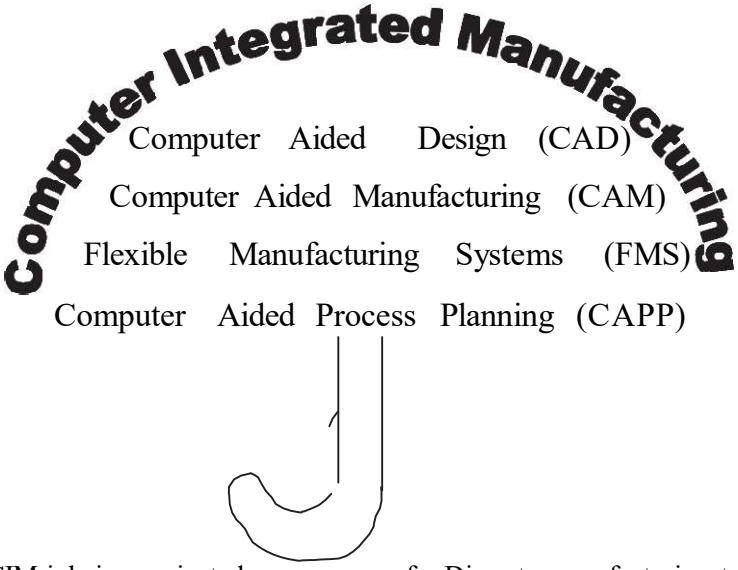

CIM is being projected as a panacea for Discrete manufacturing type of industry, which produces 40% of all goods.

"CIM is not applying computers to the design of the products of the company. That is computer aided design (CAD)! It is not using them as tools for part and assembly analysis. That is computer aided engineering (CAE)! It is not using computers to aid the

development of part programs to drive machine tools. That is computer aided manufacturing (CAM)! It is not materials requirement planning (MRP) or just-in-time (JIT) or any other method of developing the production schedule. It is not automated identification, data collection, or data acquisition. It is not simulation or modeling of any materials handling or robots or anything else like that. Taken by themselves, they are the application of computer technology to the process of manufacturing. But taken by themselves they only crate the ***islands of automation****."*

- Leo Roth Klein, Manufacturing Control systems, Inc.

Definition of CIM:

It describes integrated applications of computers in manufacturing. A number of observers have attempted to refine its meaning:

One needs to think of ***CIM as a computer system*** *in which the peripherals, instead of being printers, plotters, terminals and memory disks are robots, machine tools and other processing equipment. It is a little noisier and a little messier, but it's basically a computer system.*

- Joel Goldhar, Dean, Illinois Institute of Technology

-

CIM is a management philosophy*, not a turnkey computer product. It is a philosophy crucial to the survival of most manufacturers because it provides the levels of product design and production control and shop flexibility to compete in future domestic and international markets.* - Dan Appleton, President, DACOM, Inc.

CIM is an opportunity for realigning your two most fundamental resources: people and technology. CIM is a lot more than the integration of mechanical, electrical, and even informational systems. It's an understanding of the ***new way to manage****.*

- Charles Savage, president, Savage Associates

-

CIM is nothing but a ***data management and networking*** *problem.*

- Jack Conaway, CIM marketing manager, DEC

The preceding comments on CIM have different emphases (as highlighted).

An attempt to define CIM is analogous to a group of blind persons trying to describe an elephant by touching it.

"CIM is the integration of the total manufacturing enterprise through the use of integrated systems and data communications coupled with new managerial philosophies that improve organizational and personnel efficiency."

- *Shrensker, Computer Automated Systems Association of the Society of Manufacturing Engineers (CASA/SME)*

Concept or Technology

Some people view CIM as a concept, while others merely as a technology. It is actually both. A good analogy of CIM is *man*, for what we mean by the word man presupposes both the mind and the body. Similarly, CIM represents both the co ncept and the technology. The concept leads to the technology which, in turn, broadens the concept.

- According to Vajpayee

The meaning and origin of CIM

The CIM will be used to mean the integration of business, engineering, manufacturing and management information that spans company functions from marketing to product distribution.

The changing and manufacturing and management scenes

The state of manufacturing developments aims to establish the context within which CIM exists and to which CIM must be relevant. Agile manufacturing, operating through a global factory or to world class standards may all operate alongside CIM. CIM

is deliberately classed with the technologies because, as will be seen, it has significant technological elements. But it is inappropriate to classify CIM as a single technology, like computer aided design or computer numerical control.

External communications

Electronic data interchange involves having data links between a buying company's purchasing computer and the ordering co mputer in the supplying company. Data links may private but they are more likely to use facilities provided by telephone utility companies.

Islands of automation and software

In many instances the software and hardware have been isolated. When such computers have been used to control machines, the combination has been termed an island of automation. When software is similarly restricted in its ability to link to other software, this can be called an island of software.

Dedicated and open systems

The opposite of dedicated in communication terms is open. Open systems enable any type of computer system to communicate with any other.

Manufacturing automation protocol (MAP)

The launch of the MAP initiates the use of open systems and the movement towards the integrated enterprise.

Product related activities of a company

1. **Marketing**
   - Sales and customer order serviceing
2. **Engineering**
   - Research and product development
   - Manufacturing development

- Design
- Engineering release and control
- Manufacturing engineering
- Facilities engineering
- Industrial engineering

3. **Production planning**
    - Master production scheduling
    - Material planning and resource planning
    - Purchasing
    - Production control
4. **Plant operations**
    - Production management and control
    - Material receiving
    - Storage and inventory
    - Manufacturing processes
    - Test and inspection
    - Material transfer
    - Packing, dispatch and shipping
    - Plant site service and maintenance
5. **Physical distribution**
    - Physical distribution planning
    - Physical distribution operations
    - Warranties, servicing and spares
6. **Business and financial management**
    - Company services
    - Payroll
    - Accounts payable, billing and accounts receivable

GROUP TECHNOLOGY AND COMPUTER AIDED PROCESS PLANNING

Group technology

Group technology is a manufacturing philosophy in which similar parts are identified and grouped together to take the advantage of their similarities in design and manufacturing.

Group Technology or **GT** is a manufacturing philosophy in which the parts having similarities (Geometry, manufacturing process and/or function) are grouped together to achieve higher level of integration between the design and manufacturing functions of a firm. The aim is to reduce work- in-progress and improve delivery performance by reducing lead times. GT is based on a general principle that many problems are similar and by grouping similar problems, a single solution can be found to a set of problems, thus saving time and effort. The group of similar parts is known as **part family** and the group of machineries used to process an individual part family is known as **machine cell**. It is not necessary for each part of a part family to be processed by every machine of corresponding machine cell. This type of manufacturing in which a part family is produced by a machine cell is known as **cellular manufacturing**. The manufacturing efficiencies are generally increased by employing GT because the required operations may be confined to only a small cell and thus avoiding the need for transportation of in-process parts

Role of GT in CAD/CAM integration

1. Identifying the part families.
2. Rearranging production machines into machine cells

Part family

A part family is a collection of parts having similarities based on design or shape or similar manufacturing sequence.

Comparison of Functional layout with GT layout

Methods of Grouping of parts

1. visual inspection
2. parts classification and coding system
3. production flow analysis

Parts classification and coding system

1. system based on part design attributes
2. system based on manufacturing attributes
3. system based on design and manufacturing attributes

Methods of coding

1. hierarchical coding
2. poly code
3. decision tree coding

Coding system

1. OPITZ system
2. DCLASS
3. MICLASS etc.

Production flow analysis (PFA)

Various steps of PFA

1. Data collection
2. Part sorting and routing
3. PFA chart
4. Analysis

Production Flow Analysis

During the past ten years the people behind QDC Business Engineering have performed several Production Flow Analyses (PFA) in manufacturing industries. In short, PFA provides well-established, efficient and analytical engineering method for planning the change from "process organisation" to "product

organisation". This means that traditional production layouts are transformed into production groups, which each make a particular set of parts and is equipped with a particular set of machines and equipment enabling them to complete the assigned parts. The following figure illustrates the conventional process layout and its corresponding product based layout after PFA has been applied.

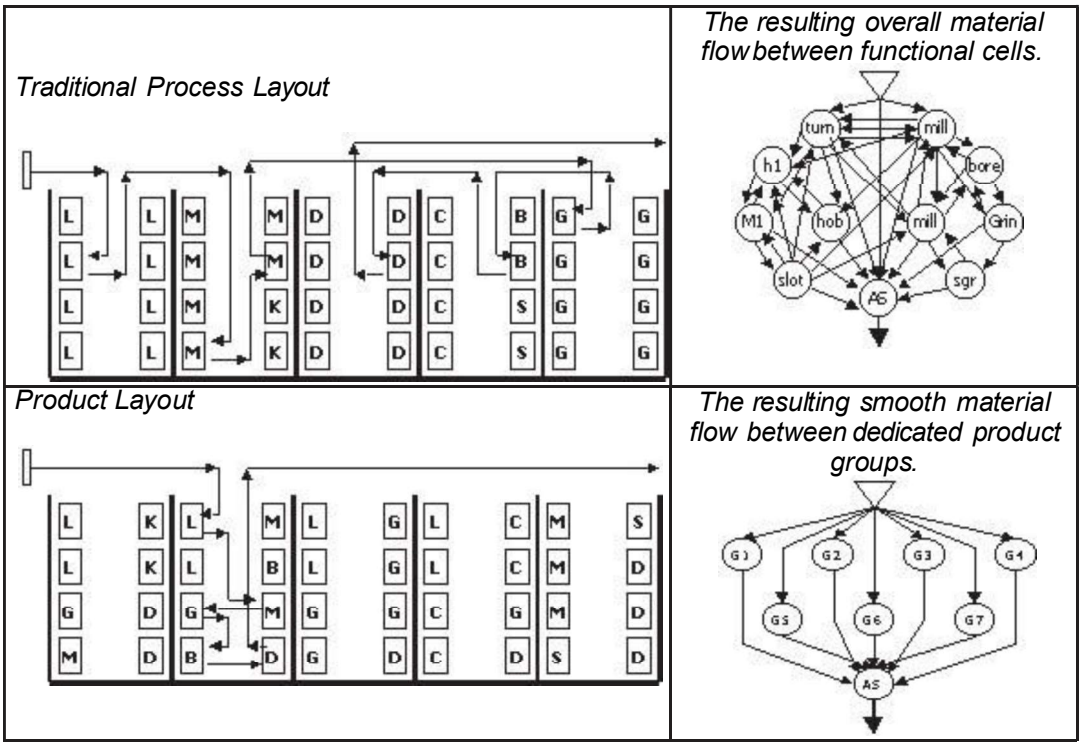

Complex material flow systems resulting from process based production layouts have long throughput times, high inventories and work in progress , which increase cost and reduce profitability. From the organisation's point of view, delegation and control are difficult to implement, which leads to bureaucratic and centralised management structures, thus increasing overhead. Applying PFA produces a plan to change the layout and organisation in such a way that production throughput times can be reduced radically, while at the same time inventories go down and delivery punctuality and quality improve to a completely new level. QDC has applied the method successfully in several manufacturing industries, especially in job-shops and electronics industries, but good results have also been obtained in service industries. Once the layout has been
changed to a product based one, new and simple production scheduling routines have been implemented to ensure excellent delivery performance.

Anticipated results

Companies that have gone through PFA and the resulting change to product based layout, have experienced the following positive effects:

- in operations management: reduced production throughput times, significantly less capital tied into the material flow and improved delivery performance;
- in general management: makes it possible to delegate the responsibility for component quality, cost and completion by due-date to the group level, which in turn reduced overhead;
- in worker's motivation: clearer responsibilities and decision making on the spot increase job satisfaction;
- in the point of information technology: simplified material flow speeds up the implementation of factory automation and simplifies software applications used to support efficient operations.

The content of Production Flow Analysis

The main method of the PFA is a quantitative analysis of all the material flows taking place in the factory, and using this information and the alternative routings to form manufacturing groups that are able to finish a set parts with the resources dedicated to it. Depending on the scale of the project this logic is applied on company, factory, group, line and tooling level respectively. Whichever the case, the work breaks down into the following steps:

- to identify and classify all production resources, machines and equipment;
- to track the all product and part routes that the company, factory or group produces;
- to analyse the manufacturing network through the main flows formed by the majority of parts;
- to study alternative routings and grouping of the machines to fit parts into a simplified material flow system;
- to further study those exceptional parts not fitting into the grouping of production resources;
- to validate the new material flow system and implementing the scheduling system based on single-piece flow.

Most production units and their layouts are the result of organic growth, during which the products have experienced many changes affecting the arsenal of the equipment in the workshop. This continuously evolving change process leads in conventional factories into complex material flow systems. PFA reveals the natural grouping of production resources like the following small-scale yet real- world example shows.

Most of our previous cases have focused on the forming of groups in job-shops, which are part of a larger production facility. These test cases have been used as eye-openers for the rest of the organisation. Our recommendation, however, is to continue with PFA on higher level. Product and component allocation in the whole supply chain combined with product and customer segmentation is an area where not only vast savings in operating costs can be achieved, but also competitive advantage can be created.

Manufacturing science knows numerous cases where complete product-oriented re-organisation of the company has produced staggering results in productivity, throughput times and competitive advantage. PFA is one of the few systematic engineering methods for achieving these results.

Production Flow Analysis was developed by Professor John L. Burbidge of the Cranfield Institute of Technology.

Benefits of group technology

1. Design
2. Tooling and setups
3. Material handling
4. Production and inventory control
5. Process planning
6. Employee satisfaction

Cellular manufacturing

- **Machine cell design**
- **The composite part concept**

Types of cell design

1. Single machine cell
2. Group machine cell with manual handling
3. Group machine cell with semi- integrated handling
4. Flexible manufacturing system

Determining the best machine arrangement

Factors to be considered:

- Volume of work to be done by the cell
- Variations in process routings of the parts
- Part size, shape, weight and other physical attributes

Key machine concept

Role of process planning

1. Interpretation of product design data
2. Selection of machining processes.
3. Selection of machine tools.
4. Determination of fixtures and datum surfaces.
5. Sequencing the operations.
6. Selection of inspection devices.
7. Determination of production tolerances.
8. Determination of the proper cutting conditions.
9. Calculation of the overall times.
10. Generation of process sheets including NC data.

Approaches to Process planning

1. Manual approach
2. Variant or retrieval type CAPP system
3. Generative CAPP system

CAPP and CMPP (Computer Managed Process Planning)

SHOP FLOOR CONTROL

Shop floor control

The three phases of shop floor control

1. Order release
2. Order scheduling
3. Order progress

Factory Data Collection System

- On-line versus batch systems
- Data input techniques

  Job traveler

  Employee time sheets

  Operation tear strips

  Prepunched cards

  Providing key board based terminals

  - One centralized terminal
  - Satellite terminals
  - Workstation terminals

Automatic identification methods

Bar codes

Radio frequency systems

Magnetic stripe

Optical character recognition

Machine vision

Automated data collection systems

Data acquisition systems

Multilevel scanning

UNIT V

FLEXIBLE MANUFACTURING SYSTEMS (FMS)

Components of Flexible Manufacturing Systems(FMS)

Workstations

Material handling and storage

Computer control system

Human resources

A **flexible manufacturing system** (**FMS**) is a manufacturing system in which there is some amount of flexibility that allows the system to react in the case of changes, whether predicted or unpredicted. This flexibility is generally considered to fall into two categories, which both contain numerous subcategories.

The first category, *machine flexibility*, covers the system's ability to be changed to produce new product types, and ability to change the order of operations executed on a part. The second category is called *routing flexibility*, which consists of the ability to use multiple machines to perform the same operation on a part, as well as the system's ability to absorb large-scale changes, such as in volume, capacity, or capability.

Most **FMS systems** consist of three main systems. The work machines which are often automated CNC machines are connected by a material handling system to optimize parts flow and the central control computer which controls material movements and machine flow.

The main advantages of an FMS is its high flexibility in managing manufacturing resources like time and effort in order to manufacture a new product. The best application of an FMS is found in the production of small sets of products like those from a mass production.

Advantages

Faster, Lower- cost/unit, Greater labor productivity, Greater machine efficiency, Improved quality, Increased system reliability, Reduced parts inventories, Adaptab ility to CAD/CAM operations. Shorter lead times

Disadvantages

Cost to implement.

Industrial FMS Communication

Training FMS with learning robot SCORBOT-ER 4u, workbench CNC Mill and CNC Lathe

An **Industrial Flexible Manufacturing System** (FMS) consists of robots, Computer- controlled Machines, N umerical controlled machines (CNC), instrumentation devices, computers, sensors, and other stand alone systems such as inspection machines. The use of robots in the production segment of manufacturing industries promises a variety of benefits ranging from high utilization to high volume of productivity. Each Robotic cell or node will be located along a material handling system such as a conveyor or automatic guided vehicle. The production of each part or work-piece will require a different
combination of manufacturing nodes. The move ment of parts from one node to another is done through the material handling system. At the end of part processing, the finished
parts will be routed to an automatic inspection node, and subsequently unloaded from the
Flexible Manufacturing System.

CNC machine

The FMS data traffic consists of large files and short messages, and mostly come from nodes, devices and instruments. The message size ranges between a few bytes to several hundreds of bytes. Executive software and other data, for example, are files with a large size, while messages

for machining data, instrument to instrument communications, status monitoring, and data reporting are transmitted in small size.

There is also some variation on response time. Large program files from a main computer usually take about 60 seconds to be down loaded into each instrument or node at the beginning of FMS operation. Messages for instrument data need to be sent in a periodic time with deterministic time delay. Other type of messages used for emergency reporting is quite short in size and must be transmitted and received with almos t instantaneous response.

The demands for **reliable FMS protocol** that support all the FMS data characteristics are now urgent. The existing IEEE standard protocols do not fully satisfy the real time communication requirements in this environment. The delay of CSMA/CD is unbounded as the number of nodes increases due to the message collisions. Token Bus has a deterministic message delay, but it does not support prioritized access scheme which is needed in FMS communications. Token Ring provides prioritized access and has a low message delay, however, its data transmission is unreliable. A single node failure which may occur quite often in FMS causes transmission errors of passing message in that node. In addition, the topology of Token Ring results in high wiring installation and cost.

A design of **FMS communication protocol** that supports a real time communication with bounded message delay and reacts promptly to any emergency signal is needed. Because of machine failure and malfunction due to heat, dust, and electromagnetic interference is common, a prioritized mechanism and immediate transmission of emergency messages are needed so that a suitable recovery procedure can be applied. A modification of standard Token Bus to implement a prioritized access scheme was proposed to allow transmission of short and periodic messages with a low delay compared to the one for long messages.

Flexibility

Flexibility in manufacturing means the ability to deal with slightly or greatly mixed parts, to allow variation in parts assembly and variations in process sequence, change the production volume and change the design of certain product being manufactured.

Workstations

Load/unload stations

Machining stations

Other processing stations

Assembly

Material handling and storage systems

Primary material handling

Secondary material handling

FMS layout

In- line layout

Loop layout

Ladder layout

Open field layout

Robot centered layout

Computer control system

Workstation control

Distribution of control instructions to workstations

Production control

Traffic control

Shuttle control

Workpiece monitoring

Tool control

Performance monitoring and reporting

Diagnostics

COMPUTER AIDED QUALITY CONTROL (CAQC)

Definitions Related to quality control

QUALITY:

Quality in manufacturing context can be defined as the degree to which a product or its components conform to certain standards that have been specified by the designer.

The design standard generally relates to the materials, dimensions and tolerances, appearance, performance, reliability, and any other measurable characteristics of the product

Quality control,
Which encompasses inspection, measurement and testing, is a vital part of any manufacturing activity and is applied to ensure consistently high quality
in manufactured goods.

Inspection

Inspection is used to examine a given products conformance to the given specification like achieving the dimensions etc..

Tesing

Testing is used to examine The products ability to perform under normal working conditions as specified and promised by the manufacturer/Designer..

Non Contact inspection
Inspection is used for fragile and complex workpieces, in which the measuring instrument will not be in physical contact with the object under inspection.

Statistical Quality Control (SQC)

Utilising the Statistical tools like X-charts, R- charts to make sure that the process for production is under control.

Statistical Process Control

SPC is an extension of SQC and concentrates on on the process to eliminate defects

The total quality management

TQM is a philosophy to ensure customers satisfaction by providing highest quality products.

Six-Sigma is a is philosophy to ensure that the defect rate in the organization is
brought down to 3.4 per million parts

TQM is based on the assumption that quality cannot be “inspected into” a product; it must be “built into” it.
That means any amount of inspection after the products or the components are manufactured will not help to improve the quality.
One must look at the process itself to avoid production of poor quality products.

To ensure this, consideration of the following aspects is necessary.

OBJECTIVES OF CAQC

The objectives of computer-aided quality control are to:

i. Improve product quality

ii. Increase productivity in the inspection process iii. Increase productivity
iv. Reduce lead-time

v. Reduce wastage due to scrap/rework

1. Quality of design:

Primary attribute of a good product is that the quality of its design must be Superior. There are several factors, which influence the design quality.

These include:

- Choice of right materials
- Selection of appropriate raw material shapes
- Design involving minimum number of parts
- Use of standardization and variety reduction
- Reduction in the material removed during processing
- Economic use of materials
- Use of standard/bought out parts

A good product can be evolved if the design is analyzed

2. Selection of appropriate process and equipment

3. Selection of appropriate process and equipment
4. Choice of equipment

5. Training of personnel

ROLE OF COMPUTER IN QC

Computer-aided inspection (CAI) and computer aided testing (CAT) are the two major segments of computer-aided quality control . CAI and CAT are performed automatically using computer and sensor technology. Today, CAI and CAT can be well integrated into the overall CIM system.

The automated methods of CAQC will result in significant improvements in product quality.

NON-CONTACT INSPECTION METHODS

The field of non-contact inspection, in particular optical inspection is composed of the following basic areas:

Computer Aided Quality Control

i. Inspection of part dimensions.
ii. Inspection of surface defects.
iii. Inspection of completed or semi-completed parts.

The main advantages of non-contact inspection are:

i. It eliminates the need to reposition the work piece.

ii. Non-contact inspection is faster than contact inspection.

iii. There is no mechanical wear encountered in the contact inspection probe.

iv. The possibility of damage to the surface of a part due to measuring

Pressure is eliminated.

Some of the examples of non-contact inspection are

laser interferometer measuring system,

laser telemetric measuring system,

machine vision system and

optical gauging.

These are discussed below.

LASER INTERFEROMETER MEASURING SYSTEM

Presently lasers are used as length measuring devices. They are commonly used for positional accuracy measurements. They are also used as length measuring machines of high accuracy (accuracy of the order of 0.01 micrometer). The feed back of this can be used for positioning of the machine and also for computation of measurements.

Nowadays it has become a common practice to use laser-measuring system for the calibration of CNC machines.

Using laser-measuring system the measurements performed are reliable, accurate and faster compared to conventional methods.

The laser interferometer can be directly interfaced with a computer. This makes it easy for the operator to evaluate the results as per the evaluation procedures mentioned in various standards like AMT, AFNOR, VDI, MTTA, and JIS etc. Using different attachments laser interferometer is also used for other measurements like straightness, flatness, squareness, velocity, pitch, yaw etc.

LASER TELEMETRIC MEASURING SYSTEMS

This is a high speed gauging system providing accuracy and repeatability of a contact type gauge with versatility of a non-contact type of gauge. The principle is explained below:

A thin band of laser beam projects from a transmitter to receiver. When an object is placed across the beam, the object casts a shadow. The signal from light entering the receiver is used by the microprocessor to detect the shadow and to calculate the dimension represented by the distance between the edges of the shadow.

The system consists of three modules:

i. Transmitter module
ii. Receiver module
iii. Processor electronics

The transmitter module contains a low power He-Ne gas laser and its power supply,a specially designed collimating lens, a synchronous motor, multi-faced reflector prism,a synchronous pulse detector and protective window.

This produces a collimated parallel scanning laser beam moving at a high and constant speed. The scanning beam appears as a line of red light. The receiver module collects and photo electrically senses the laser light transmitted past the object being measured.

The processor electronics takes the receiver signals and converts them to digital signal and displays the dimensions being gauged.

The information thus collected is processed not only to qualify or classify a part but also can be used to correct the manufacturing process that might have caused the undesirable deviation.
This is done automatically without touching the part and without the need for human intervention.

The microprocessor actuates precise computer control of continuously manufactured parts.

The prompting formats guide the operator regarding the gauge setting. The operational procedures notify the operator in case any error occurs in the system by displaying error message on the CRT terminal.
It also keeps the operator informed about the product in the production process, displays, prints out and records the complete measured and analyzed results.

Laser telemetric measuring systems give out a number of signal outputs and processing options to make the dimensional measurement more useful in production environment.

Examples are listed below:

i. A high/low limit alarm option, which activates lights and connector panel, output when the tolerance limits are exceeded.

ii. A process control option, which makes it possible to provide a closed loop control of the diameter of a continuously processed product. The chart recorder and instrumentation interface provide both an analog output for plotting deviation and a RS-232C for digital transmission of other instruments and controls.

VISION SYSTEM

A vision system can be defined as a system for automatic acquisition and analysis of images to obtain desired data for interpreting or controlling an activity. In a broader sense, the term is applied to a wide range of non- contact electro-optical sensing techniques from simple triangulation and profiling to a 3D object recognition technique.

These are based on sophisticated computerized image analysis routines. The applications range from relatively simple detection and measuring tasks to full-blown robot control, which include quality assurance, sorting, material handling and process control, robot guidance, calibration and testing, machine monitoring and safety.

The schematic diagram of a typical vision system is shown in Fig 14.2. This system involves image acquisition, image processing or image analysis and interpretation.

Acquisition requires appropriate lighting, the use of electronic camera and means of storing a digital representation of the image.
Processing involves manipulating the digital image to simplify and reduce number of data points that must be handled by subsequent analytical routines used to interpret the data. Computers with suitable softwares are used for this purpose.

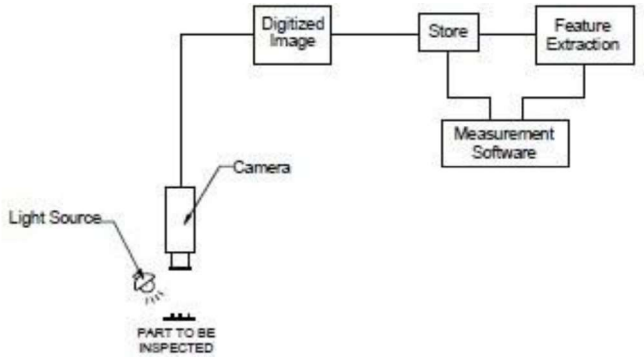

PARTS

Store Feature, Digitized Image ,Feature Extraction, Measurement, Software, CAmera & Light Source

Typical Vision System

By using the vision systems measurements can be carried out at any angle along all the three reference axes X, Y and Z without contacting the part. The measured values of the component parameters are then compared with the specified tolerances, which are stored in the memory of the computer.

The measured values, the specified values with the deviation and an Indicating on whether the part is passed or not passed are displayed on the VDU. Using a sorting system it is also possible to sort the parts based on these results. Computer vision systems offer several advantages like reduction of tooling and fixture costs, elimination of need for precise part location for handling by robots and integrated automation of dimensional verification and defect Detection.

NON-CONTACT CNC CMM

The non-contact CNC CMM inspects a part by observing it with a video camera, analyzing the image and outputting the results.

The construction of this CMM is similar to that of a conventional CMM.

APPLICATIONSOF NON-CONTACT CNC CMM

These are particularly useful to measure the following work pieces, which are difficult to measure with contact method:

- Printed circuit boards.
- Pins and connectors.
- Injection molded plastic items.
- Pressed parts.
- IC package.
- Ceramic parts.
- Photoelectric parts.
- Etched parts.

Some non-contact CMM's operate using laser digitization technique.

These are particularly suitable for measurement of complex 3-D surfaces.

This equipment makes product data generation for reverse engineering an easy corrective action.

After incorporating the correction through tool offset, the full speed production will be started.

The general applications of probe systems are given below:

Inspection

Component verification

In-cycle gauging

Digitizing

Tool setting

Job set up

Tool breakage detection

The data from the probe systems can be communicated to the machine control unit in three ways:

Inductive transmission

Hard-wired transmission

Optical transmission

COMPUTER AIDED INSPECTION USING ROBOTS

Robots can be used to carry out inspection or testing operations for mechanical dimensions and other physical characteristics and product performance.

Generally robot must work with other pieces of equipment in order to perform the operations.

Examples include.

Machine vision systems,

Robot manipulated inspection and/or testing equipment.

Checking robot, **programmable robot, and co-ordinate robot** are some of the titles given to multi-axis measuring machines aimed at high-speed measurement.

These machines automatically perform all the basic routines of a CNC co-ordinate measuring machine but at a faster rate than that of a CMM.

These machines are designed to be used in environments such as **shop floor**.

They are not as accurate as precision CMM‘s but they can check up to accuracies of 5 Micrometers which is often sufficient for many applications. However, quality levels can be improved by increasing the number of inspections.

By using robots the dimensional drifts can be accurately and quickly detected and the appropriate process action can be taken.

One example is, segregating the components according to the tolerance specifications.

Using the modern touch trigger probe, a co-ordinate robot or a pair of robots can take successive readings at high speed and evaluate the results using a computer graphics based real time statistical analysis system.

This gives high-speed data processing of measured information and can provide early warning of rejection.

The computer also monitors the geometry and wear of the tools, which produce the component.

After the measurement, if the component is not acceptable it is placed on a conveyor where it
slides under gravity into REJECT bin.

The following list summarizes the important benefits of CAQC.

i. With Computer aided inspection and computer aided testing inspection and testing will typically be done on a 100% basis rather by the sampling procedures normally used in traditional QC.

This eliminates any problem in assembly later and therefore is important in CIM.

ii. Inspection is integrated into the manufacturing process. This will help to reduce the lead-time to complete the parts.

iii. **Reduction in inspection Time**

The use of non-contact sensors is recommended for computer aided inspection and CIM.

With contact inspection devices, the part must be stopped and often repositioned to allow the inspection device to be applied properly.

These activities take time. W ith non-contact sensing devices the parts can be inspected while in operation.

The inspection can thus be completed in a fraction of a second.

The on-line non-contact sensors are useful as the feedback element of adaptive control systems.

These systems will be capable of making adjustments to the process variables based on analysis of the data including trend analysis.

An example of the application of trend analysis can be found in the compensation of gradual wear of cutting tool in a machining operation.

This would not only help to identify out-of-tolerance conditions but also to take corrective action.

By regulating the process in this manner, parts will be made much closer to the desired nominal dimension rather than merely within tolerance. This will help to reduce scrap losses and improve product quality. v. Sensor technology will not be the only manifestation of automation in CAQC.

Intelligent robots fitted with computer vision and other sensors, as an integral part of completely automated test cells is also a feature of CIM.

vi. An important feature of QC in a CIM environment is that the CAD/CAM data base will be used to develop inspection plan.

As mentioned earlier inspection can be either contact or non-contact type. The contact method usually involves the use of coordinate measuring machines (CMM).

CO -ORDINATE MEASURING MACHINE (CMM)

A typical CNC CMM is shown in Fig

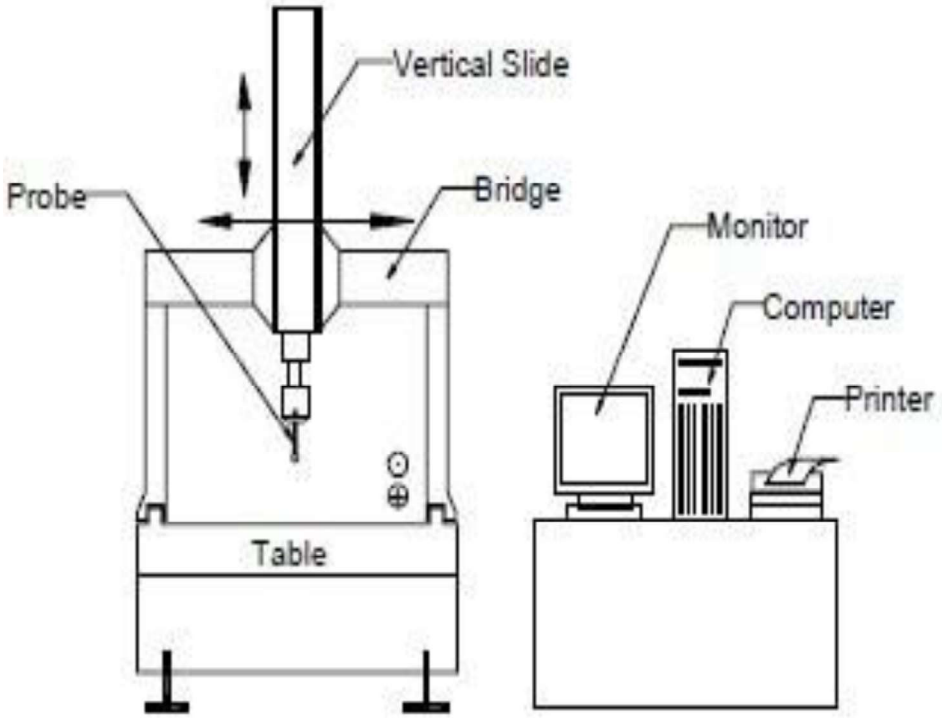

Fig. 14.1 CNC CMM

The Major Components of a CMM:

(i) **Stationary granite measuring table**:

Granite table provides a stable reference plane for locating parts to be measured.

It is provided with a grid of threaded holes defining clamping locations and facilitating part mounting. As the table has a high load carrying capacity and is accessible from three sides, it can be easily integrated into the material flow system of CIM.

(ii) Length measuring system:

A 3-axis CMM is provided with digital incremental length measuring system for each axis.

(iii) Air bearings:

The bridge, cross beam and spindle of the CMM are supported on air bearings with high rigidity. They are designed insensitive to vibrations.

(iv) Control unit:

The control unit allows manual measurement and self teach programming in addition to CNC operation. The control unit is microprocessor controlled. Usually a joystick is provided to activate the drive for manual measurement.

CNC Measuring Centres are provided with dynamic probe heads and a probe changing system, which can be operated manually or automatically.

(v) Software: The CMM, the computer and the software together represent one system whose efficiency and cost effectiveness.

The features of CMM software :

• Measurement of diameter, centre distances, lengths, geometrical and form errors in prismatic components etc.

• On-line statistics for statistical information in a batch.

• Parameter programming to minimize CNC programming time of similar parts.

• Measurement of plane and spatial curves.

• Data communications.

• Digital input and output commands for process integration.

• Programs for the measurement of spur, helical, bevel and hypoid gears.

• Interface to CAD software.

ADVANTAGES OF CNC OPERATION OF CMM

CNC operation increases cost effectiveness through the following advantages:

i. Shorter measuring times

ii. Higher throughput rates

iii. Better repeatability

iv. Economical even for small batches

v. Simple operation

vi. Unmanned second and third shift inspection of parts if parts are loaded automatically.

COMPUTER INTEGRATED MANUFACTURING (CIM)

COMPONENTS OF CIM

CIM and company strategy

Does that mean the starting point for CIM is a network to link all the existing islands of automation and software? Or is it the integration of the existing departmental functions and activities as suggested by the CIM wheel?

The answer to both the questions just posed is no. the starting point for CIM is not islands of automation or software, not is it the structure presented by the CIM wheel, rather it is a ***company's business strategy.***

System modeling tools

It is helpful if the modeling tool is of sufficient sophistication that it exists in three forms:

As a representation of the system

As a dynamic model

As an executable model

IDEF and IDEF0

IDEF initially provided three modeling methods

IDEF0 is used for describing the activities and functions of a system

IDEF1 is used for describing the information and its relationships

IDEF2 is used for describing the dynamics of a system

Activity cycle diagrams

This modeling approach follows the notation of IDEF0 by having activities represented as rectangles and by having the activity names specified inside the rectangle. All resources which are to be represented in the model are classified as entity classes.

CIM open system architecture(CIMOSA)

CIMOSA was produced as generic reference architecture for CIM integration as part of an ESPRIT project. The architecture is designed to yield executable models or parts of models leading to computerized implementations for managing an enterprise.

Manufacturing enterprise wheel

The new manufacturing enterprise wheel's focus is now the customer at level 1, and it identifies 15 key processes circumferentially at level 4. These are grouped under the headings of customer support, product/process and manufacturing.

CIM architecture

CIM ARCHITECTURE

CIM Architecture Overview

To develop a comprehensive CIM strategy and solutions, an enterprise must begin with .solid foundations such as CIM architecture. A CIM architecture is an information systems structure that enables industrial enterprises integrate information and business processes It accomplishes this first by establishing the direction integration will take; and second, by defining the interfaces between the users and the providers of this integration function.The chart (Figure 2.1) illustrates how a CIM architecture answers the enterprise's integration needs. As you can see here, a CIM architecture provides a core of common services. These services support every other area of the enterprise—from its common support functions to its highly specialized business processes.

2.1.1 Three key building blocks

The information environment of an industrial enterprise is subject to frequent changes in systems configuration and technologies. A CIM architecture can offer a flexible structure that enables it to react to these changes. This structure relies on a number of modular elements that allow systems to change more easily to grow along with enterprise needs. And as you can see from the chart on the facing page, the modular elements that give a CIM architecture its flexible structure are based on three key building blocks:

• *Communications*—the communication and distribution of data.

• *Data management*—the definition, storage and use of data

• *Presentation*—the presentation of this data to people and devices throughout the enterprise

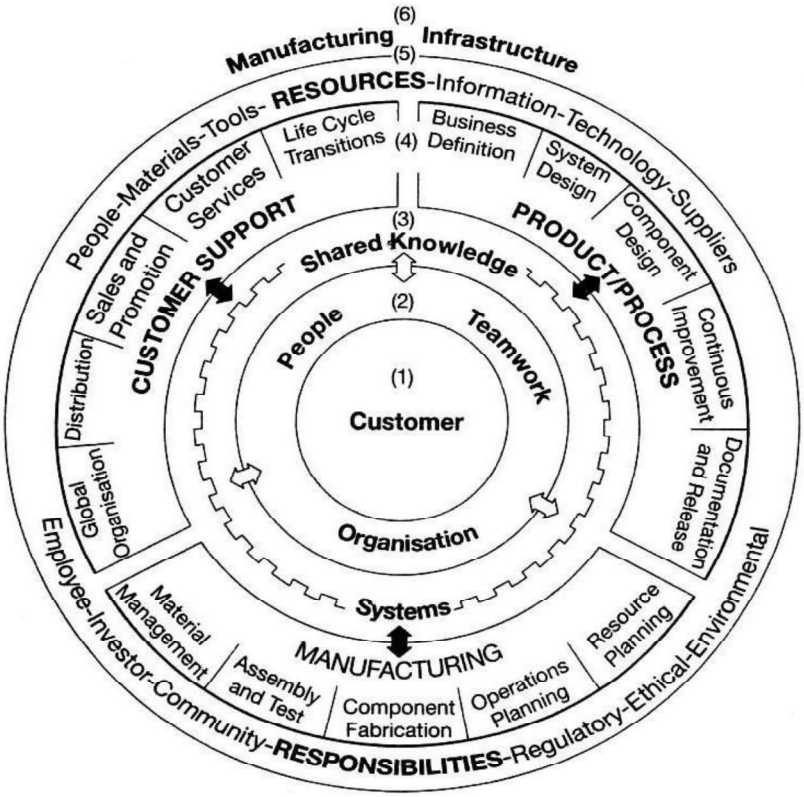

Data dictionary

Data repository and store

A layered structure

Repository builder

Product data management (PDM): CIM implementation software

The four major modules typically contained within the PDM software are

Process models

Process project management

Data management

Data and information kitting

The PDM environment provides links to a number of software packages used by a company. They are

A CAD package

A manufacturing/production management package

A word processing package

Databases for various applications

Life-cycle data

Communication fundamentals

A frequency

An amplitude

A phase which continuously changes

A bandwidth

An introduction to baseband and broadband

Telephone terminology

Digital communications

Local area networks

Signal transmission, baseband and broadband

Interconnection media

Topology

Star topology

Ring topology

Bus topology

Tree topology

LAN implementations

Client server architecture

Networks and distributed systems

Multi-tier and high speed LANs

Network management and installation

Security and administration

Performance

Flexibility

User interface

Installation

OPEN SYSTEM AND DATABASE FOR CIM

Open system interconnection (OSI) model

The physical layer

The data link layer

The network layer

The transport layer

The session layer

The presentation layer

The application layer

Manufacturing automation protocol and technical office protocol

Basic database terminology

Database management system

Database system

Data model

Transaction

Schema

Data definition language

Data manipulation language

Applications program

Host language