UNIT III
PROCESSOR AND PIPELINING

Fundamental concepts – Execution of a complete instruction – Multiple bus organization – Hardwired control – **Micro programmed control** – Pipelining: Basic concepts – Data hazards – Instruction hazards – Influence on Instruction sets – Data path and control consideration.

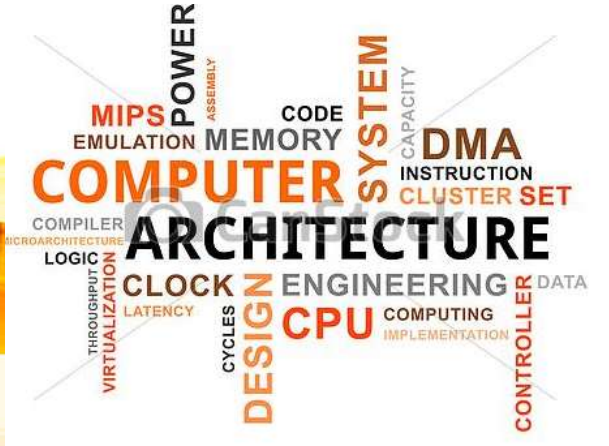

Recap the previous Class

Microprogrammed Control

- Control signals are generated by a program similar to machine language programs.
- Control Word (CW); microroutine; microinstruction

Micro - instruction	..	PC_{in}	PC_{out}	MAR_{in}	Read	MDR_{out}	IR_{in}	Y_{in}	Select	Add	Z_{in}	Z_{out}	$R1_{out}$	$R1_{in}$	$R3_{out}$	WMFC	End	..
1		0	1	1	1	0	0	0	1	1	1	0	0	0	0	0	0	
2		1	0	0	0	0	0	1	0	0	0	1	0	0	0	1	0	
3		0	0	0	0	1	1	0	0	0	0	0	0	0	0	0	0	
4		0	0	1	1	0	0	0	0	0	0	0	0	0	1	0	0	
5		0	0	0	0	0	0	1	0	0	0	0	1	0	0	1	0	
6		0	0	0	0	1	0	0	0	1	1	0	0	0	0	0	0	
7		0	0	0	0	0	0	0	0	0	0	1	0	1	0	0	1	

Control sequence for the instruction

Add (R3),R2

Step	Action
1	PC_{out} , MAR_{in} , Read, Select4,Add, Z_{in}
2	Z_{out} , PC_{in} , Y_{in} , WMF C
3	MDR_{out} , IR_{in}
4	$R3_{out}$, MAR_{in} , Read
5	$R1_{out}$, Y_{in} , WMF C
6	MDR_{out} , SelectY, Add, Z_{in}
7	Z_{out} , $R1_{in}$, End

Conditional branch

Address	Microinstruction
0	PC_{out} , MAR_{in} , Read, Select4, Add, Z_{in}
1	Z_{out} , PC_{in} , Y_{in} , WMF C
2	MDR_{out} , IR_{in}
3	Branch to starting address of appropriate
.....	.....
25	If N=0, then branch to microinstruction 0
26	Offset-field-of-IR_{out} , SelectY, Add, Z_{in}
27	Z_{out} , PC_{in} , End

Basic organization of a microprogrammed control unit

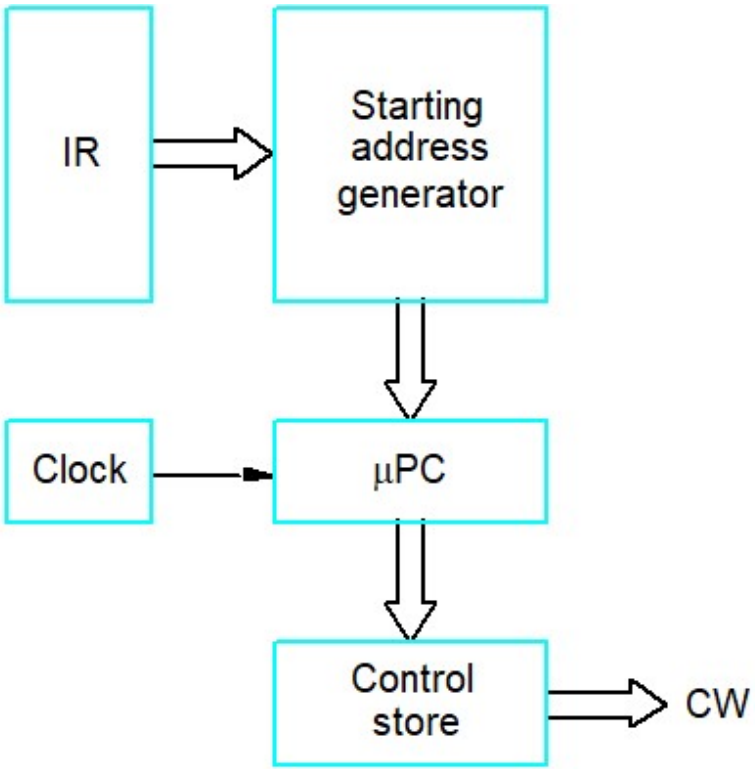

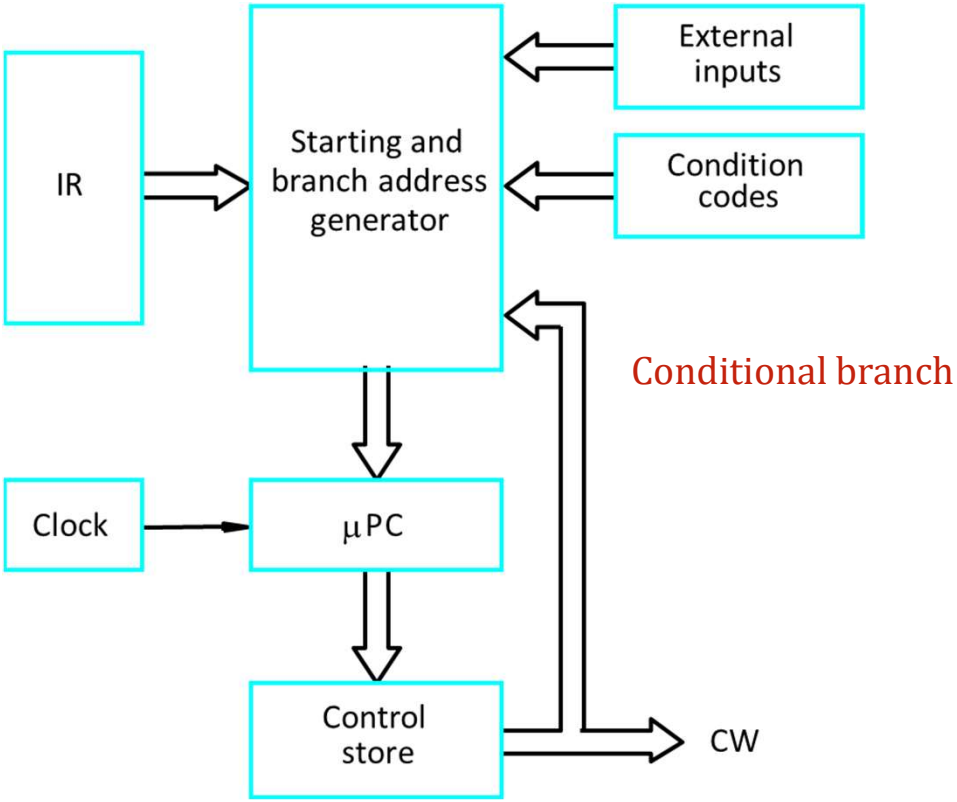

Microinstructions

- A straightforward way to structure microinstructions is to assign one bit position to each control signal.
- However, this is very inefficient.
- The length can be reduced: most signals are not needed simultaneously, and many signals are mutually exclusive.
- All mutually exclusive signals are placed in the same group in binary coding.

Microinstructions

Microinstruction

F1	F2	F3	F4	F5

F1 (4 bits)	F2 (3 bits)	F3 (3 bits)	F4 (4 bits)	F5 (2 bits)
0000: No transfer	000: No transfer	000: No transfer	0000: Add	00: No action
0001: PC_{out}	001: PC_{in}	001: MAR_{in}	0001: Sub	01: Read
0010: MDR_{out}	010: IR_{in}	010: MDR_{in}	⋮	10: Write
0011: Z_{out}	011: Z_{in}	011: $TEMP_{in}$	1111: XOR	
0100: $R0_{out}$	100: $R0_{in}$	100: Y_{in}	16 ALU functions	
0101: $R1_{out}$	101: $R1_{in}$			
0110: $R2_{out}$	110: $R2_{in}$			
0111: $R3_{out}$	111: $R3_{in}$			
1010: $TEMP_{out}$				
1011: $Offset_{out}$				

F6	F7	F8	...

F6 (1 bit)	F7 (1 bit)	F8 (1 bit)
0: SelectY	0: No action	0: Continue
1: Select4	1: WMFC	1: End

Microprogram Sequencing

Add src, Rdst

Four addressing modes:

- Register,
- Autoincrement,
- Autodecrement
- Indexed (with indirect forms).

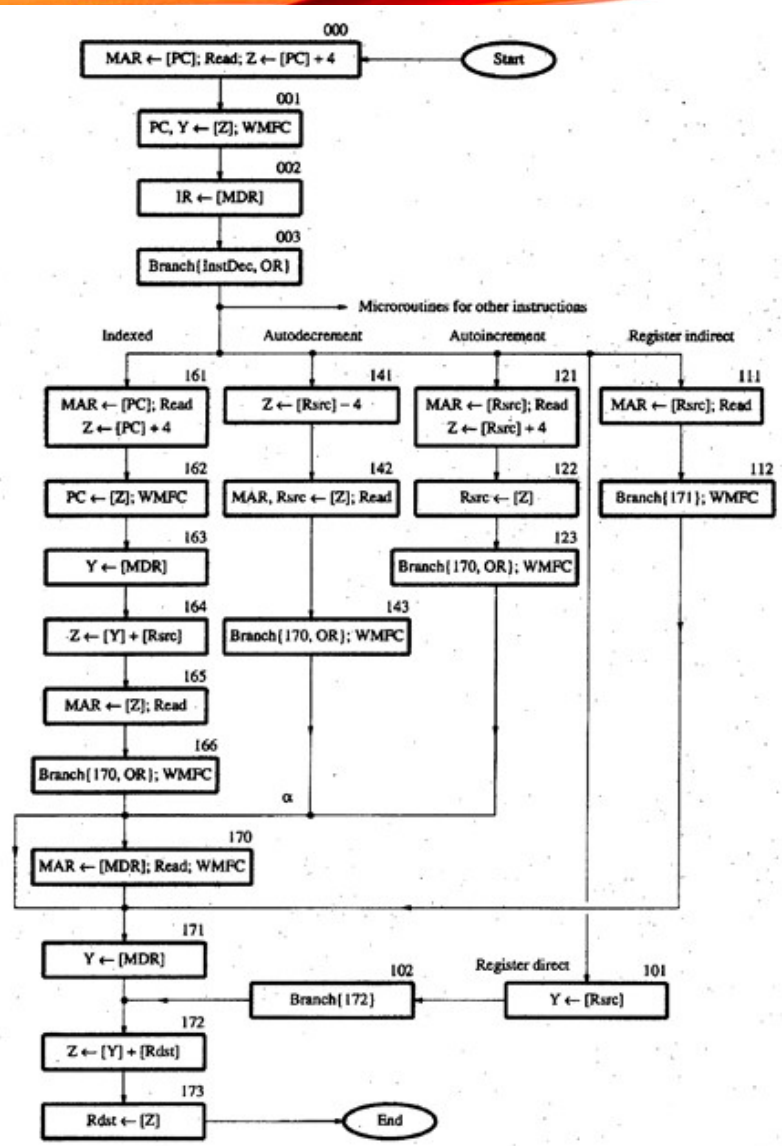

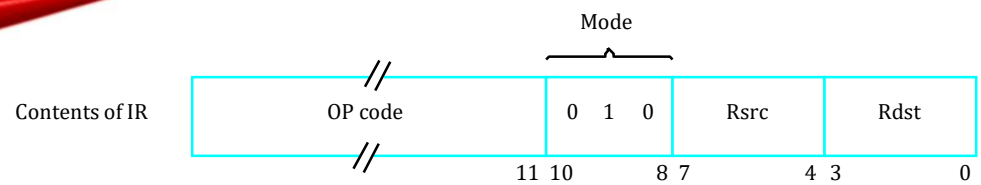

Address (octal)	Microinstruction
000	PC_{out}, MAR_{in}, Read, Select 4, Add, Z_{in}
001	Z_{out}, PC_{in}, Y_{in}, WMFC
002	MDR_{out}, IR_{in}
003	mBranch { mPC ¬ 101 (from Instruction decoder);
	$mPC_{5,4}$ ¬ $[IR_{10,9}]$; mPC_3 ¬ $[\overline{IR_{10}}] \times [\overline{IR_9}] \times [IR_8]$}
121	$Rsrc_{out}$, MAR_{in}, Read, Select4, Add, Z_{in}
122	Z_{out}, $Rsrc_{in}$
123	mBranch { mPC ¬ 170; mPC_0 ¬ $[\overline{IR_8}]$}, WMFC
170	MDR_{out}, MAR_{in}, Read, WMFC
171	MDR_{out}, Y_{in}
172	$Rdst_{out}$, SelectY , Add, Z_{in}
173	Z_{out}, $Rdst_{in}$, End

Microinstructions with Next-Address Field

- A powerful alternative approach is to include an address field as a part of every microinstruction to indicate the location of the next microinstruction to be fetched.

Microinstructions with Next-Address Field

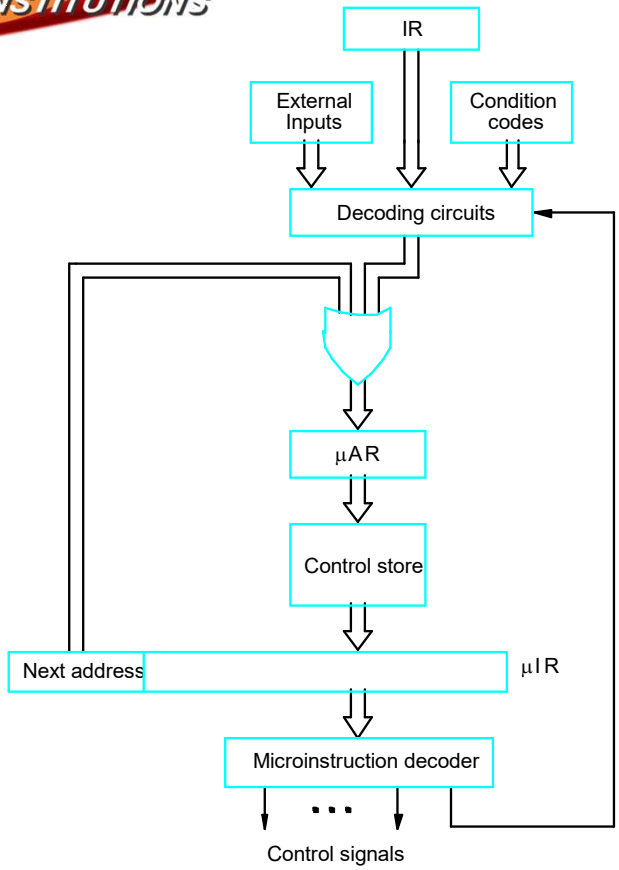

Microinstruction

F0	F1	F2	F3

F0 (8 bits)	F1 (3 bits)	F2 (3 bits)	F3 (3 bits)
Address of next microinstruction	000: No transfer 001: PC_{out} 010: MDR_{out} 011: Z_{out} 100: $Rsrc_{out}$ 101: $Rdst_{out}$ 110: $TEMP_{out}$	000: No transfer 001: PC_{in} 010: IR_{in} 011: Z_{in} 100: $Rsrc_{in}$ 101: $Rdst_{in}$	000: No transfer 001: MAR_{in} 010: MDR_{in} 011: $TEMP_{in}$ 100: Y_{in}

F4	F5	F6	F7

F4 (4 bits)	F5 (2 bits)	F6 (1 bit)	F7 (1 bit)
0000: Add 0001: Sub ⋮ 1111: XOR	00: No action 01: Read 10: Write	0: SelectY 1: Select4	0: No action 1: WMFC

F8	F9	F10

F8 (1 bit)	F9 (1 bit)	F10 (1 bit)
0: NextAdrs 1: InstDec	0: No action 1: OR_{mode}	0: No action 1: OR_{indsrc}

Implementation of the Microroutine

Octal address	F0	F1	F2	F3	F4	F5	F6	F7	F8	F9	F10
0 0 0	0 0 0 0 0 0 0 0 1	0 0 1	0 1 1	0 0 1	0 0 0 0	0 1	1	0	0	0	0
0 0 1	0 0 0 0 0 0 0 1 0	0 1 1	0 0 1	1 0 0	0 0 0 0	0 0	0	1	0	0	0
0 0 2	0 0 0 0 0 0 0 1 1	0 1 0	0 1 0	0 0 0	0 0 0 0	0 0	0	0	0	0	0
0 0 3	0 0 0 0 0 0 0 0 0	0 0 0	0 0 0	0 0 0	0 0 0 0	0 0	0	0	1	1	0
1 2 1	0 1 0 1 0 0 1 0	1 0 0	0 1 1	0 0 1	0 0 0 0	0 1	1	0	0	0	0
1 2 2	0 1 1 1 1 0 0 0	0 1 1	1 0 0	0 0 0	0 0 0 0	0 0	0	1	0	0	1
1 7 0	0 1 1 1 1 0 0 1	0 1 0	0 0 0	0 0 1	0 0 0 0	0 1	0	1	0	0	0
1 7 1	0 1 1 1 1 0 1 0	0 1 0	0 0 0	1 0 0	0 0 0 0	0 0	0	0	0	0	0
1 7 2	0 1 1 1 1 0 1 1	1 0 1	0 1 1	0 0 0	0 0 0 0	0 0	0	0	0	0	0
1 7 3	0 0 0 0 0 0 0 0	0 1 1	1 0 1	0 0 0	0 0 0 0	0 0	0	0	0	0	0

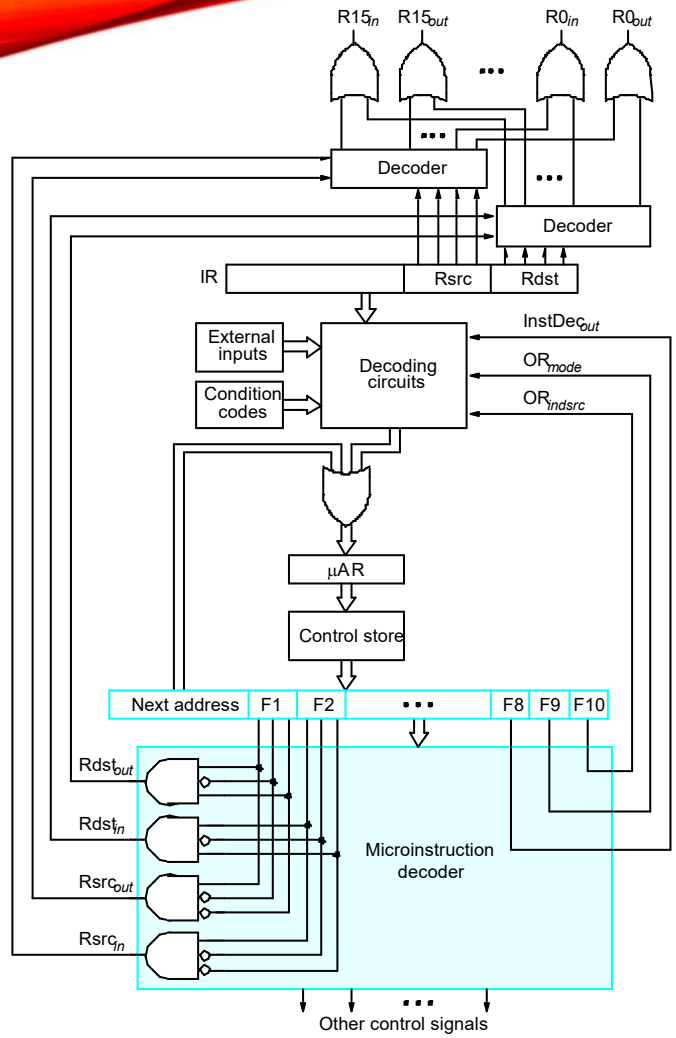
R15in
R15out
R0in
R0out
Decoder
Decoder
IR
Rsrc
Rdst
External inputs
Condition codes
Decoding circuits
InstDecout
ORmode
ORindsrc
µAR
Control store
Next address
F1
F2
F8
F9
F10
Rdstout
Rdstin
Rsrcout
Rsrcin
Microinstruction decoder
Other control signals


Thank You