Design of fast adders

- A carry-look ahead adder (CLA) or fast adder is a type of adder used in digital logic.
- A carry-look ahead adder improves speed by reducing the amount of time required to determine carry bits.
- It can be contrasted with the simpler, but usually slower, ripple-carry adder (RCA), for which the carry bit is calculated alongside the sum bit, and each stage must wait until the previous carry bit has been calculated to begin calculating its own sum bit and carry bit.
- The carry-lookahead adder calculates one or more carry bits before the sum, which reduces the wait time to calculate the result of the larger-value bits of the adder
- A carry-Lookahead adder is a fast parallel adder as it reduces the propagation delay by more complex hardware, hence it is costlier.
- This method makes use of logic gates so as to look at the lower order bits of the augend and addend to see whether a higher order carry is to be generated or not.

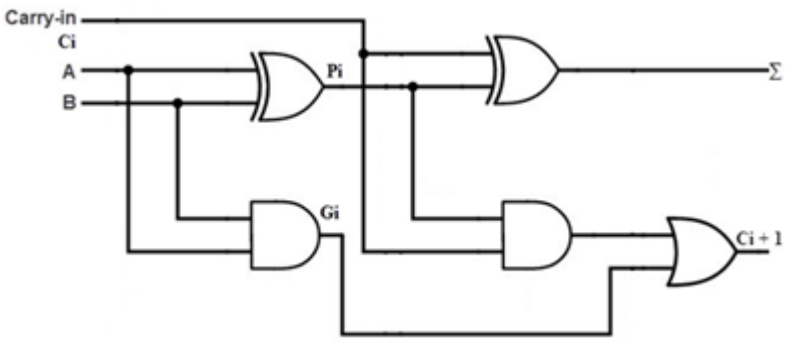

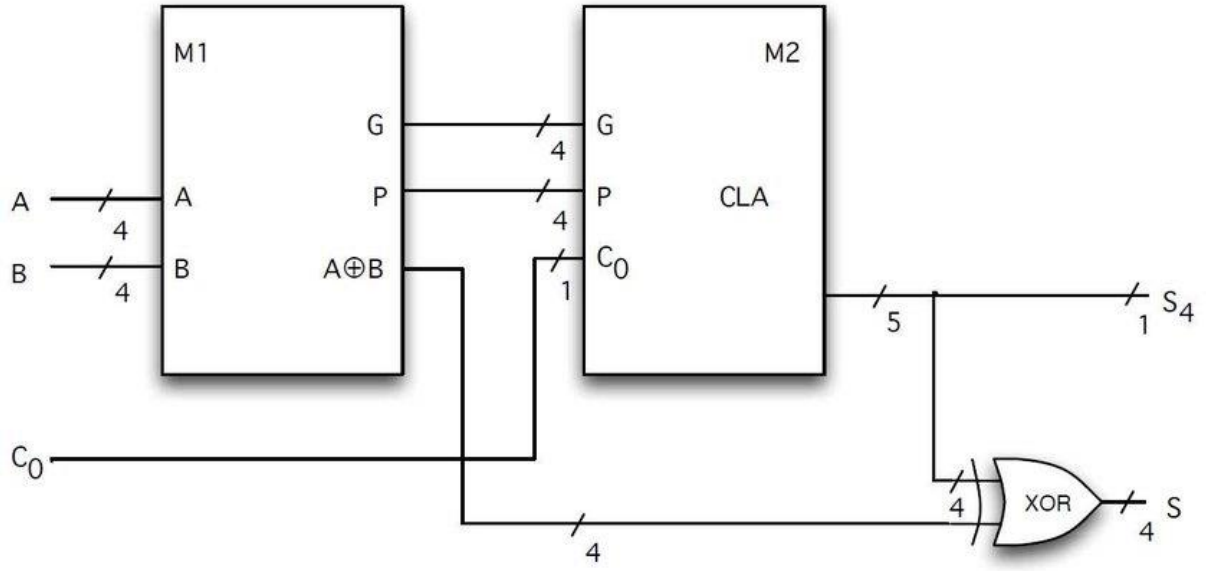
M1
M2
G
P
A⊕B
A
B
CLA
C0
S4
XOR
S
4
5
1

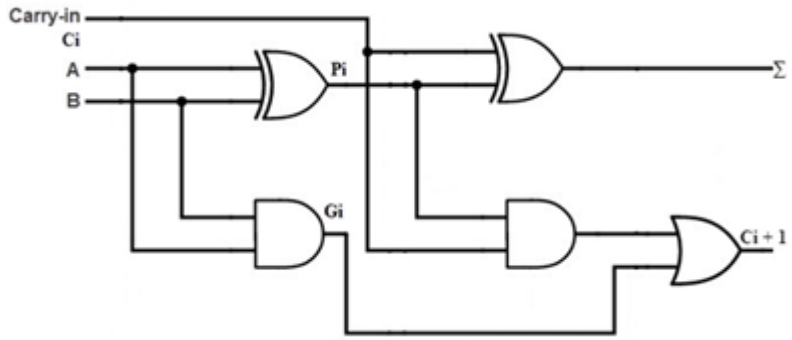
Carry-in
Ci
A
B
Pi
Gi
Σ
Ci + 1